TDK·Lambda KMS-A Series

15-60W Medical AC-DC PCB-Mount Power Supplies

Features

- Medical Safety Certifications (4kVAC Input - Output)
- Class II (No ground needed)
- Wide Temperature Range (-40 to +80°C)
- Low off-load Power Draw
- Smaller size than KMS
- High Efficiency

Photo (KMS60A shown)

Key Market Segments & Applications

Medical Industrial Test COMM Broadcast

RoHS

Specifications

Model		KMS15A	KMS30A	KMS60A
Input Voltage Range (1)	-	90-264VAC 47-440Hz* or 120-370VDC*		
Inrush Current Limiting (115 / 230VAC) (2)	A	20 / 40A	30 / 60A	55 / 95A
Input Current (115 / 230VAC)	mA	385 / 250mA	650 / 400mA	1500 / 1000mA
Off-load Power Draw	W	<0.1W	<0.15W	<0.3W
Recommended External Fuse	-	3.15 A slow blow type		
Temperature Coefficient	-	±0.05%/°C		
Voltage Set Accuracy	%	±2%		
Minimum Load	-	None		
Overcurrent Protection	-	Hiccup mode, automatic recovery		
Overvoltage Protection	%	Yes, Zener diode clamp		
Hold-up Time (115 / 230VAC)	ms	15 / 56ms (typ)	>10ms	
Leakage Current (Touch)	mA	<0.1mA at 264VAC		
Series Operation	-	Yes. Use diodes connected across each output		
Operating Temperature (3)	-	-40°C to +85°C, derate linearly to 30% load from 50°C to 80°C		
Maximum Case Temperature	°C	90°C (83°C <115VAC)	85°C (78°C <115VAC)	80°C (73°C <115VAC)
Storage Temperature	-	-40°C to +90°C		
Humidity	%RH	10% to 95% RH (non-condensing)		
Cooling	-	Convection		
Withstand Voltage	VAC	Input to output: 4kVAC, 2 x MOPPs		
Immunity	-	EN61000-4-2, -3, -4, -5, -6, -8, -11		
Altitude	m	5000m		
Safety Agency Certification	-	UL/CSA/IEC/EN 60950-1, ANSI/AAMI ES60601-1, IEC/EN 60601-1 (2xMOPPs)		
Conducted and Radiated EMI	-	EN55011 Class B		
Weight	g	59g	130g	280g
Size (LxWxH)	in (mm)	2.07 x 1.08 x 0.93” 52.5 x 27.5 x 23.5 mm	2.52 x 1.77 x 0.93” 64.0 x 45.0 x 23.5 mm	3.5 x 2.5 x 1.06” 89.0 x 63.5 x 27.0 mm
Mounting & Case	-	PC board mountable. Resin case (UL 94V-0)		
MTBF	hrs	200,000 to 400,000 hours, model dependant		
Warranty	yrs	3 years		

(1) Derate linearly to 80% load below 110VAC (100VAC for KMS15A)

(2) Cold start, 25°C ambient

(3) Derate linearly to 80% load below -30°C

* Safety certified for AC input, 47-63Hz only

TDK·Lambda KMS-A Series

Model Selector

Model	Output Voltage (V)	Maximum Current (A)	Power (W)	Output Ripple & Noise (mV)	Line Regulation (mV)	Load Regulation (mV)	Efficiency (%)	Maximum Capacitive Load (µF)
KMS15A-5	5V	3A	15W	120mV	±25mV	±50mV	79%	7000
KMS30A-5	5V	5A	25W	100mV	±25mV	±50mV	84%	6800
KMS60A-5	5.1V	10A	51W	100mV	±25mV	±75mV	86%	10000
KMS15A-9	9V	1.666A	15W	120mV	±45mV	±90mV	80%	5000
KMS60A-9	9V	6.666A	60W	100mV	±45mV	±135mV	87%	5000
KMS15A-12	12V	1.25	15W	120mV	±60mV	±120mV	84%	1500
KMS30A-12	12V	2.5A	30W	150mV	±60mV	±120mV	89%	1600
KMS60A-12	12V	5A	60W	120mV	±60mV	±120mV	88%	5000
KMS15A-15	15V	1A	15W	150mV	±75mV	±150mV	84%	1000
KMS30A-15	15V	2A	30W	150mV	±75mV	±150mV	86%	1200
KMS60A-15	15V	4A	60W	150mV	±75mV	±150mV	86%	4000
KMS15A-24	24V	0.625	15W	240mV	±120mV	±240mV	85%	470
KMS30A-24	24V	1.25A	30W	240mV	±120mV	±240mV	86%	470
KMS60A-24	24V	2.5A	60W	240mV	±120mV	±240mV	87%	2000

KMSA15

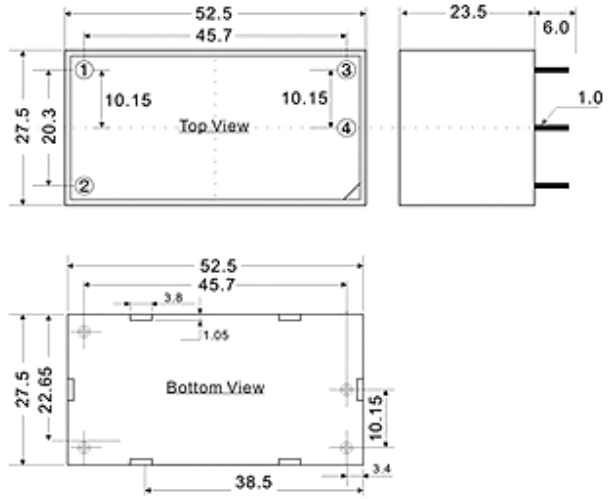

KMSA30

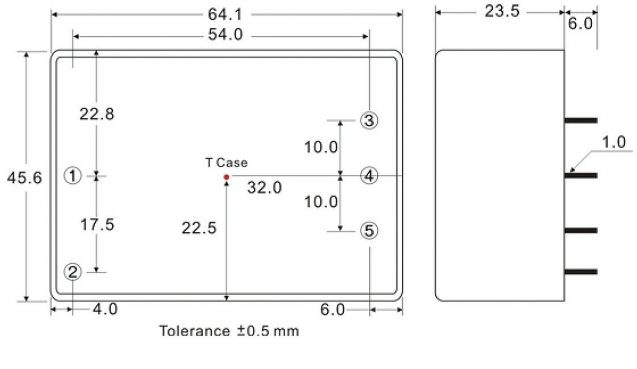

KMSA60

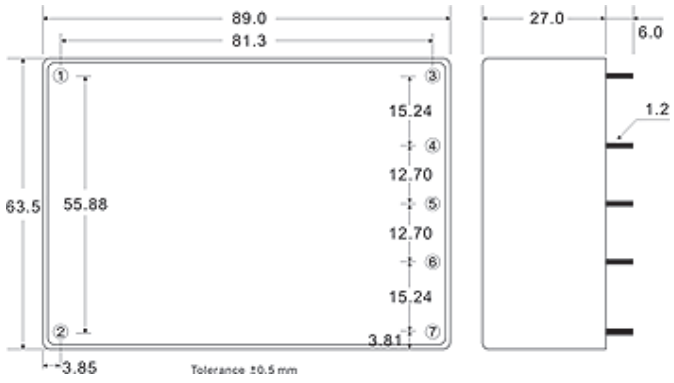

Pinout

PIN #	KMS15A	KMS30A	KMS60A
1	AC (L)	AC (N)	AC (L)
2	AC (N)	AC (L)	AC (N)
3	+Vout	-Vout	+Vout
4	-Vout	No pin	No pin
5		+Vout	-Vout
6			No pin
7			No pin

For Additional Information, please visit
us.tdk-lambda.com/lp/products/km-series.htm