# SWDC SERIES

## SWDC- F0x0

Ultraviolet (UV) sterilization technology is a technology that inactivates bacterial virus microorganisms by using ultraviolet radiation energy. Instantaneous high-energy ultraviolet radiation is applied to the surface of bacterial microorganisms. Ultraviolet radiation sterilization has the characteristics of high efficiency sterilization, no resurrection and no side effects.

*Specifications are subject to change without notice.*

©2017-2020 Harvatek Corporation. All rights reserved.

# SWDC-Fxxx Series

## SWDC- F0x0

SWDC series are ultraviolet LED modules with high-power ultraviolet ray emissions of 265-285 nm which purifies water through destroying micro-organisms. When the water flows through the module, the ultraviolet rays with high intensity sterilization kill the bacteria microorganisms in the water to achieve the purpose of purification. This module completely solves the problems of microbial contamination and bacteria levels in drinking water exceeding standards, especially killing microorganisms such as bacteria the flowing water and achieving instant effect during usage. It has vastly improved the quality of daily life and has made the public's drinking experience convenient.

## Product specification:

1. Module dimension: Ø63.5mm x 138mm

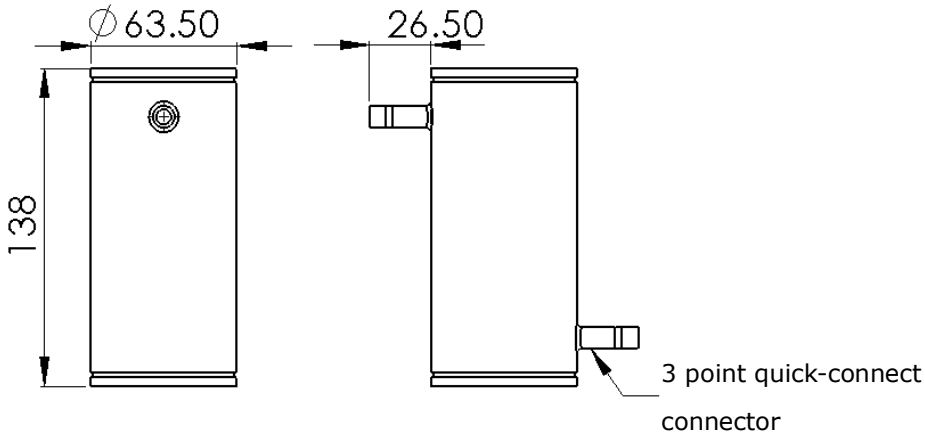


2. Water diverter: 304 Stainless Steel (can customize to medical grade 316 Stainless Steel)
3. Outlet/Inlet diameter: Ø6.35 quick-connect connector
4. Depending on the flow rate, multiple high power LEDs will sterilize micro-organisms at the same time (Please contact us for more details)

*Specifications are subject to change without notice.*

©2017-2020 Harvatek Corporation.. All rights reserved.

5. Module operating voltage: 24V
6. Maximum influent water pressure: 1 MPa. It is strictly prohibited to exceed the operating pressure
7. Maximum design flow rate: As shown in the table below. If water flow rate exceeds this, the sterilization effect would decrease.
   (Power capacity above 2.2A)

| Series | Radiant Power (mW) | Max Flow rate (L/min) | Input Voltage (V) | Input Current (A) |
|---|---|---|---|---|
| SWDC-F060 | 96-180 | 6 | 24 | 1.17 |
| SWDC-F080 | 128-240 | 8 | | 1.55 |

8. Life cycle: can be lit continuously for 1,000 hours or more①
9. The module can be assembled either horizontally or vertically. If needed to assemble in other ways, then please ask us prior to installing.

① *IESNA (Illuminating Engineering Society of North America) LM80 experimental method, 70% Lumens depreciation evaluation standard*

## Product Feature:

1. Sterilization efficiency up to 99.99% ②
2. Aesthetic module structure and appearance, quality material, and sterilization effect certified by a number of third-party entities.
3. Module structure with multiple design aspects optimized, simple installation and usage, safe and easy to manage
4. Fast sterilization, good performance, no heat, pure physical sterilization, unaltered physical and chemical characteristics of water after sterilization, colorless and odorless, and no by-products produced
5. The module housing is made of food-grade 304 stainless steel. It is light in weight, very pressure resistant, has long life cycle and no pollution of heavy metal ions.

② *The standard Escherichia coli ATCC25922 were used in a ISO100-grade laboratory to calculate the sterilization rate by measuring the number of colonies before and after irradiation. Please contact us for detailed test methods and bacteria strains used.*


©2017-2020 Harvatek Corporation.. All rights reserved.

## Installation instructions:

1. It is recommended to fix the module vertically on a support. Connect to the water network through the quick-connect connector provided along with the module. Pay attention to the inlet and outlet port locations as shown in Figure 1.
2. Turn on the power and the LEDs will start by themselves while the system will enter sterilization mode. By using external water flow to trigger the control switch, LED sterilization will work in pulse modes of "water flows and the module switches on" and "water stops and module switches off". This will help extend the life cycle of the module.
3. There are two warnings available for setup to rapid feedback on the module's status:
   I. Short Circuiting LED (not lighting up)
   II. Internal water damage to circuit boards
4. Installation is complete if the hydraulic pressure test can be carried out without water leakage at 4 $Kg/cm^2$. This module is designed to be splash proof, thus the module can withstand ordinary water spray and still be in working order.

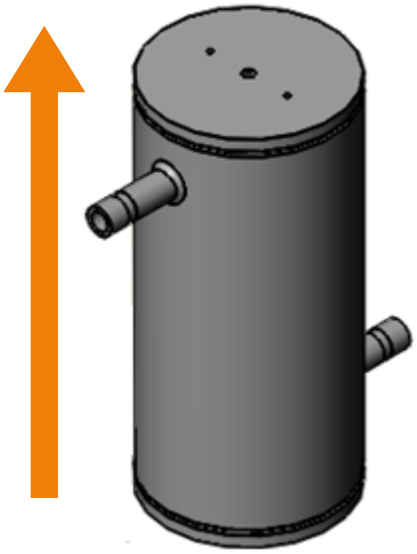

*Fig. 1 Schematic diagram*


©2017-2020 Harvatek Corporation.. All rights reserved.

*Note:*

*Each type of microbial killing requires specific ultraviolet radiation energy. The radiation of SWDC-Fxxx ultraviolet sterilization module, in strict accordance with national standards, is 30mJ/cm$^2$, which can kill more than 99.99% of bacteria and viruses. When the to-be sterilized water is turbid, high in water hardness, calcium, or magnesium, bacteria extermination may be weakened. Therefore, it is recommended to set a filter device at the front end of the module inlet to reduce the influence of water quality on bacteria eradication.*

*Ultraviolet rays also cause damages to the human body. For safety reasons, this module is designed for all components to be assembled within an enclosed case without any exchangeable repair parts inside. Therefore, it is not recommended to disassemble the module by oneself unless necessary. Please be sure to open the module under the professional guidance of our company.*


©2017-2020 Harvatek Corporation.. All rights reserved.