ProLight Opto Technology Corporation

ProLight PM2K-1LQE-SL
1W 370nm + 400nm Power LED
Technical Datasheet
Version: 1.0

Features

- Instant light (less than 100ns)
- Lead free reflow soldering
- RoHS compliant
- Cool beam, safe to the touch

Typical Applications

- UV gluing, UV curing, UV marking
- UV drying of printing inks and lacquers
- Currency inspection
- Forensic analysis - urine, protein stains
- Leak detection using fluorescent dyes
- Detects fluorescing minerals and gems
- Indoor Lighting
- Outdoor Lighting

Emitter Mechanical Dimensions

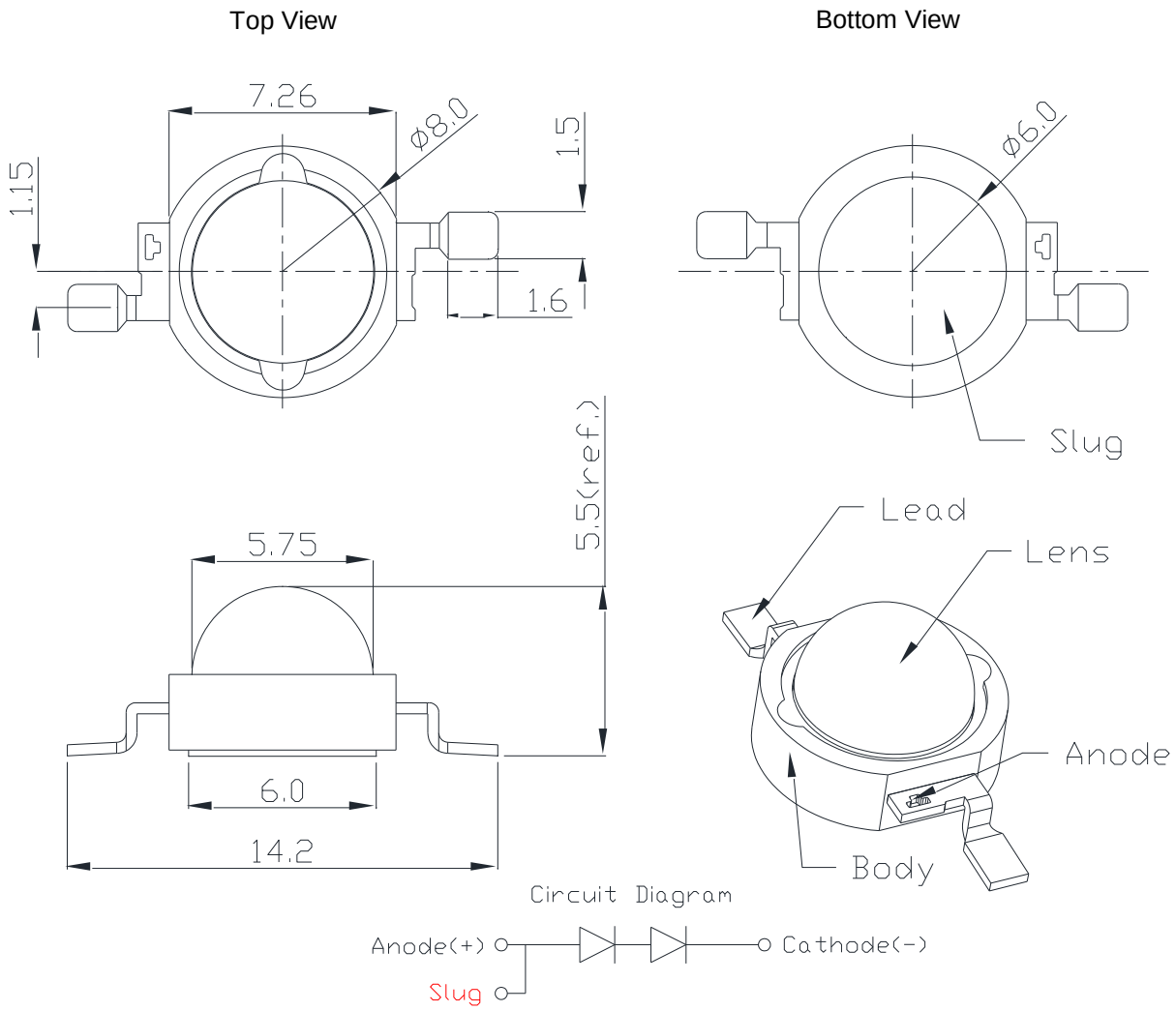

Notes:
1. The Anode side of the device is denoted by a hole in the lead frame.
2. Electrical insulation between the case and the board is required. Do not electrically connect either the anode or cathode to the slug.
3. Drawing not to scale.
4. All dimensions are in millimeters.
5. Unless otherwise indicated, tolerances are ± 0.20mm.
6. Please do not bend the leads of the LED, otherwise it will damage the LED.
7. **Please do not use a force of over 3kgf impact or pressure on the lens of the LED, otherwise it will cause a catastrophic failure.**

*The appearance and specifications of the product may be modified for improvement without notice.

Flux Characteristics at 150mA, T_J = 25°C

Radiation Pattern	Color	Part Number Emitter	Radiometric Power (mW) Minimum	Typical
Lambertian	370nm + 400nm	PM2K-1LQE-SL	275	430

- ProLight maintains a tolerance of ± 7% on flux and power measurements.
- Please do not drive at rated current more than 1 second without proper heat sink.

Electrical Characteristics at 150mA, T_J = 25°C

Color	Forward Voltage V_F (V) Min.	Typ.	Max.	Thermal Resistance Junction to Slug (°C/ W)
370nm + 400nm	6.2	7.0	7.8	8

- ProLight maintains a tolerance of ± 0.1V for Voltage measurements.

Optical Characteristics at 150mA, T_J = 25°C

Color	Peak Wavelength λ_P Min.	Typ.	Max.	Total included Angle (degrees) $\theta_{0.90V}$	Viewing Angle (degrees) $2\ \theta_{1/2}$
370nm + 400nm	365 nm 395 nm	370 nm 400 nm	375 nm 405 nm	180	130

Absolute Maximum Ratings

Parameter	370nm + 400nm
DC Forward Current (mA)	175
Peak Pulsed Forward Current (mA)	500 (less than 1/10 duty cycle@1KHz)
ESD Sensitivity (HBM per MIL-STD-883E Method 3015.7)	> ±500V
LED Junction Temperature	120°C
Operating Board Temperature at Maximum DC Forward Current	-20°C - 45°C
Storage Temperature	-40°C - 100°C
Soldering Temperature	JEDEC 020c 260°C
Allowable Reflow Cycles	3
Reverse Voltage	Not designed to be driven in reverse bias

Radiometric Power Bin Structure

Color	Bin Code	Minimum Radiometric Power (mW)	Maximum Radiometric Power (mW)	Available Color Bins
370nm + 400nm	N	275	335	All
	P	335	435	All
	Q	435	515	【1】
	R	515	635	【1】

- ProLight maintains a tolerance of ± 7% on flux and power measurements.
- The flux bin of the product may be modified for improvement without notice.
- 【1】 The rest of color bins are not 100% ready for order currently. Please ask for quote and order possibility.

Forward Voltage Bin Structure

Color	Bin Code	Minimum Voltage (V)	Maximum Voltage (V)
370nm + 400nm	A	6.2	6.6
	B	6.6	7.0
	D	7.0	7.4
	E	7.4	7.8

- ProLight maintains a tolerance of ± 0.1V for Voltage measurements.

Note: Although several bins are outlined, product availability in a particular bin varies by production run and by product performance. Not all bins are available in all colors.

Color Spectrum, $T_J = 25°C$

1. 370nm + 400nm

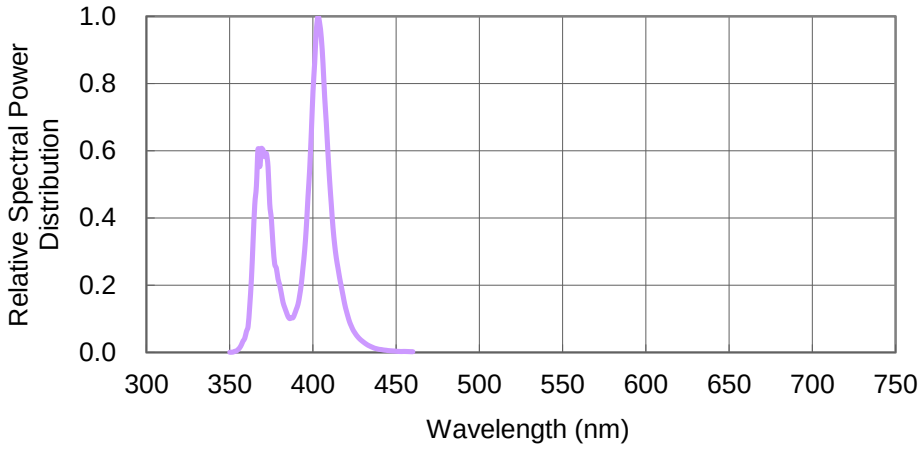

Light Output Characteristics

Relative Light Output vs. Junction Temperature at 150mA

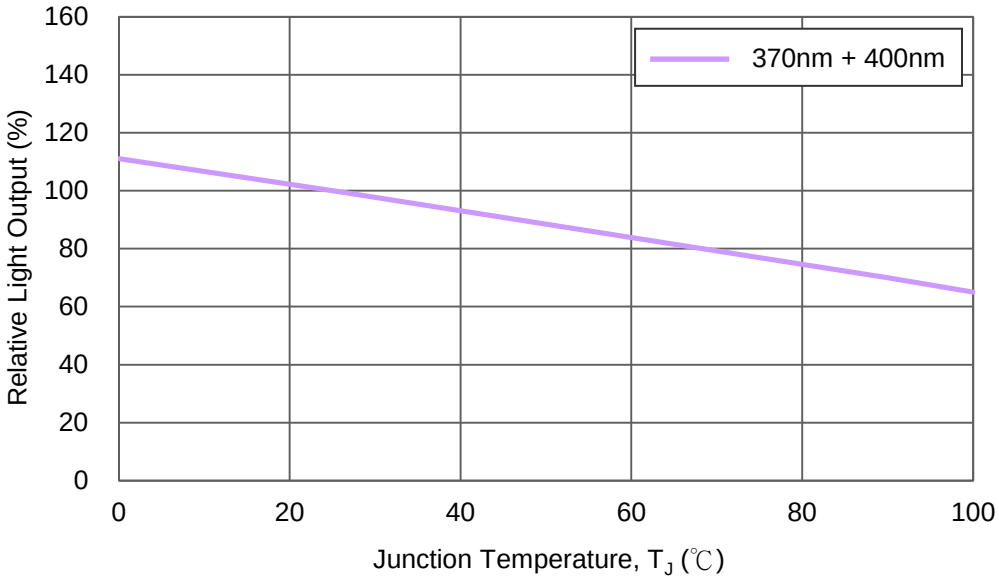

Forward Current Characteristics, T_J = 25℃

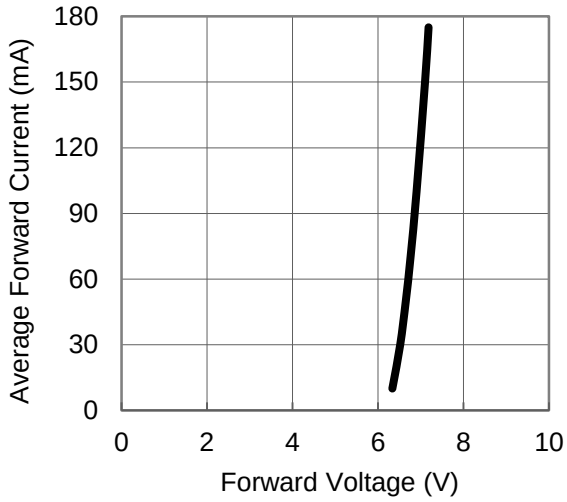

Fig 1. Forward Current vs. Forward Voltage

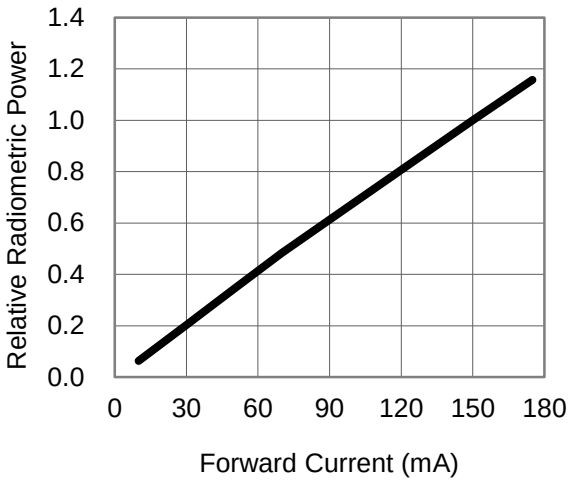

Fig 2. Relative Radiometric Power vs. Forward Current at T_J=25℃ maintained.

Solder Temperature (Slug) vs. Maximum Forward Current

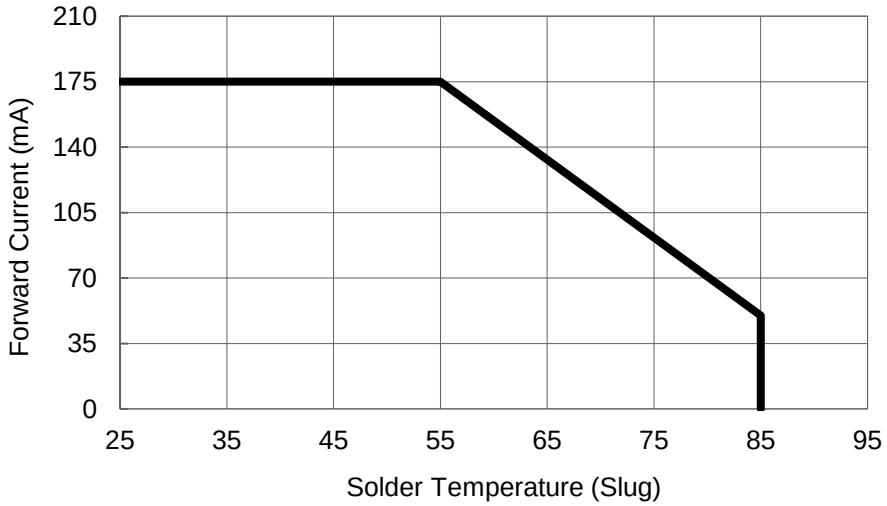

Typical Representative Spatial Radiation Pattern

Lambertian Radiation Pattern

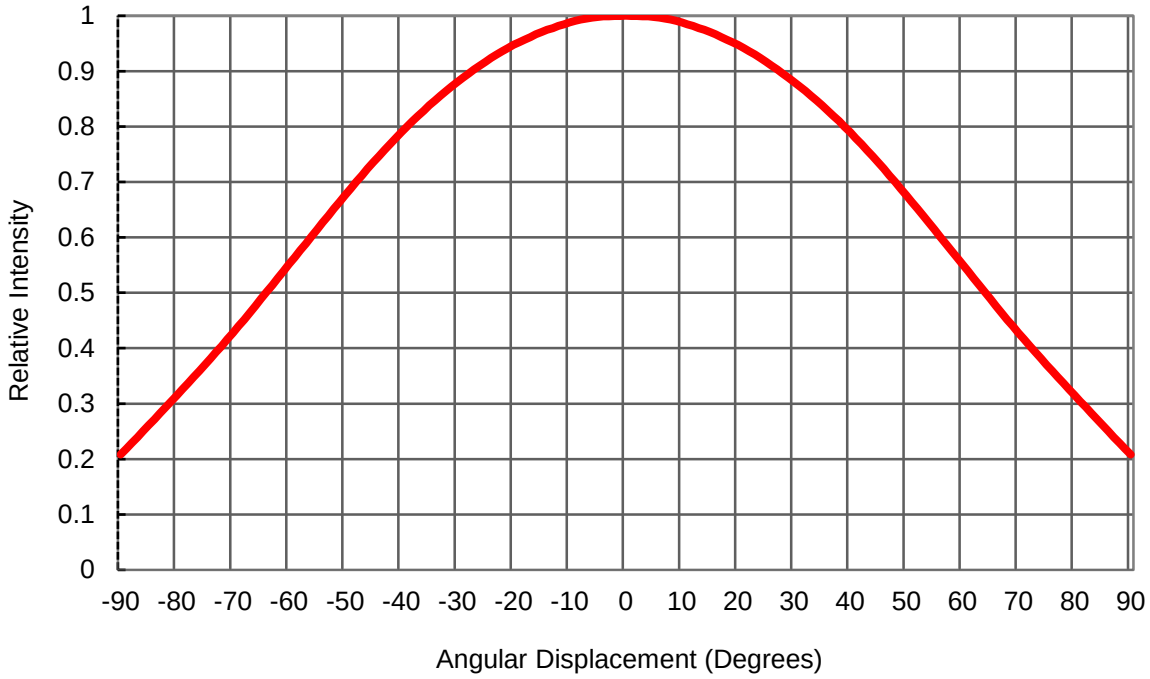

Qualification Reliability Testing

Stress Test	Stress Conditions	Stress Duration	Failure Criteria
Room Temperature Operating Life (RTOL)	25°C, I_F = max DC (Note 1)	500 hours	Note 2
Wet High Temperature Storage Life (WHTSL)	85°C/85%RH, non-operating	500 hours	Note 2
High Temperature Storage Life (HTSL)	110°C, non-operating	500 hours	Note 2
Low Temperature Storage Life (LTSL)	-40°C, non-operating	500 hours	Note 2
Non-operating Temperature Cycle (TMCL)	0°C to 100°C, 30 min. dwell, <5 min. transfer	100 cycles	Note 2
Mechanical Shock	1500 G, 0.5 msec. pulse, 5 shocks each 6 axis		Note 3
Natural Drop	On concrete from 1.2 m, 3X		Note 3
Variable Vibration Frequency	10-2000-10 Hz, log or linear sweep rate, 20 G about 1 min., 1.5 mm, 3X/axis		Note 3
Solder Heat Resistance (SHR)	260°C ± 5°C, 10 sec.		Note 3
Solderability	Steam age for 16 hrs., then solder dip at 260°C for 5 sec.		Solder coverage on lead

Notes:

1. Depending on the maximum derating curve.
2. Criteria for judging failure

Item	Test Condition	Criteria for Judgement	
		Min.	Max.
Forward Voltage (V_F)	I_F = max DC	-	Initial Level x 1.1
Luminous Flux or Radiometric Power (Φ_V)	I_F = max DC	Initial Level x 0.7	-

* The test is performed after the LED is cooled down to the room temperature.

3. A failure is an LED that is open or shorted.

Recommended Solder Pad Design

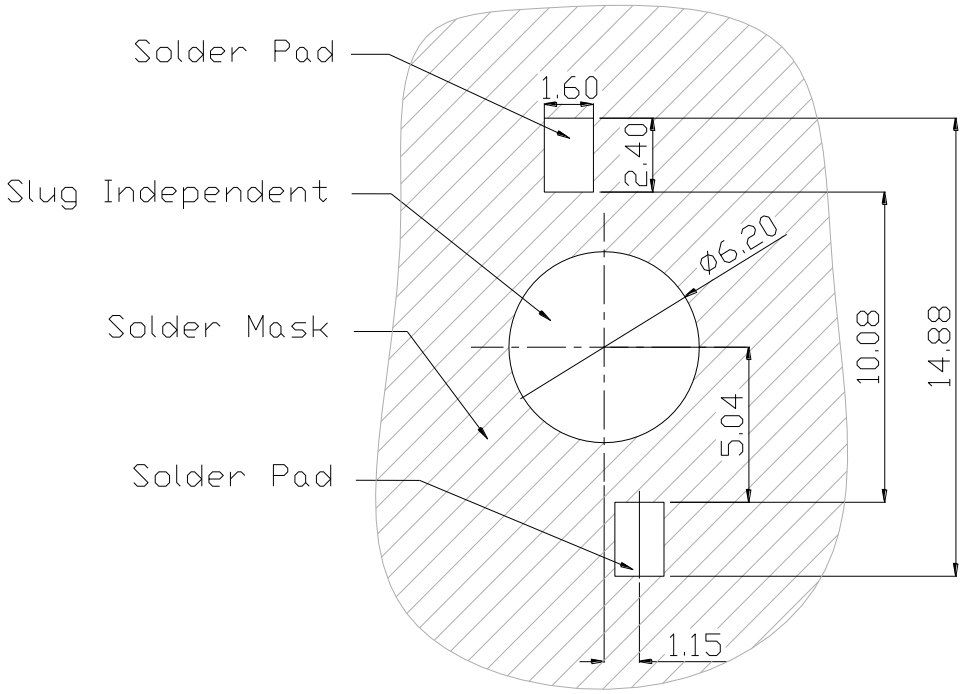

- All dimensions are in millimeters.
- Electrical isolation is required between Slug and Solder Pad.

Reflow Soldering Condition

Profile Feature	Sn-Pb Eutectic Assembly	Pb-Free Assembly
Average Ramp-Up Rate (T_{Smax} to T_P)	3°C / second max.	3°C / second max.
Preheat – Temperature Min (T_{Smin}) – Temperature Max (T_{Smax}) – Time (t_{Smin} to t_{Smax})	100°C 150°C 60-120 seconds	150°C 200°C 60-180 seconds
Time maintained above: – Temperature (T_L) – Time (t_L)	183°C 60-150 seconds	217°C 60-150 seconds
Peak/Classification Temperature (T_P)	240°C	260°C
Time Within 5°C of Actual Peak Temperature (t_P)	10-30 seconds	20-40 seconds
Ramp-Down Rate	6°C/second max.	6°C/second max.
Time 25°C to Peak Temperature	6 minutes max.	8 minutes max.

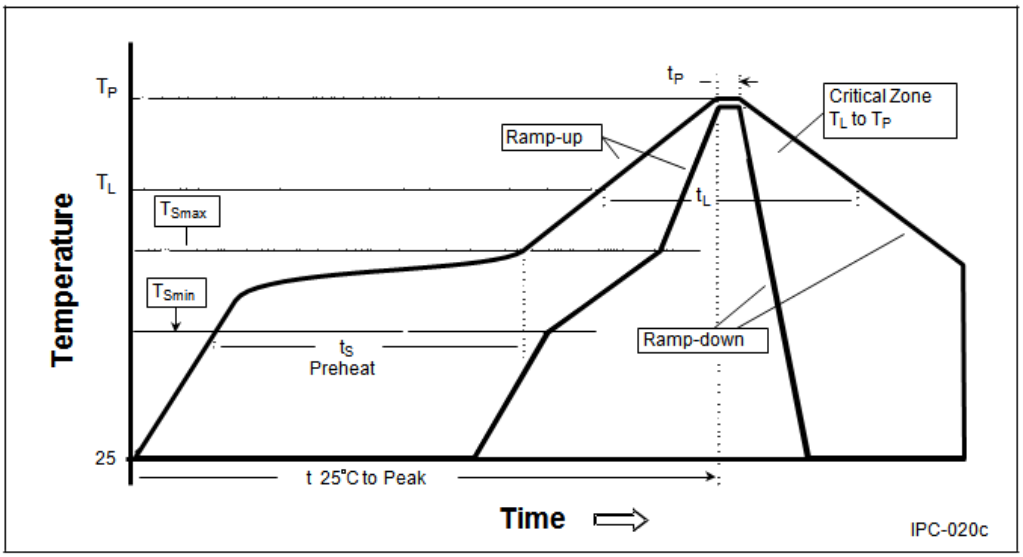

- **We recommend using the M705-S101-S4 solder paste from SMIC (Senju Metal Industry Co., Ltd.) for lead-free soldering.**
- All temperatures refer to topside of the package, measured on the package body surface.
- Repairing should not be done after the LEDs have been soldered. When repairing is unavoidable, a double-head soldering iron should be used. It should be confirmed beforehand whether the characteristics of the LEDs will or will not be damaged by repairing.
- Reflow soldering should not be done more than three times.
- When soldering, do not put stress on the LEDs during heating.
- After soldering, do not warp the circuit board.

Emitter Tube Packaging

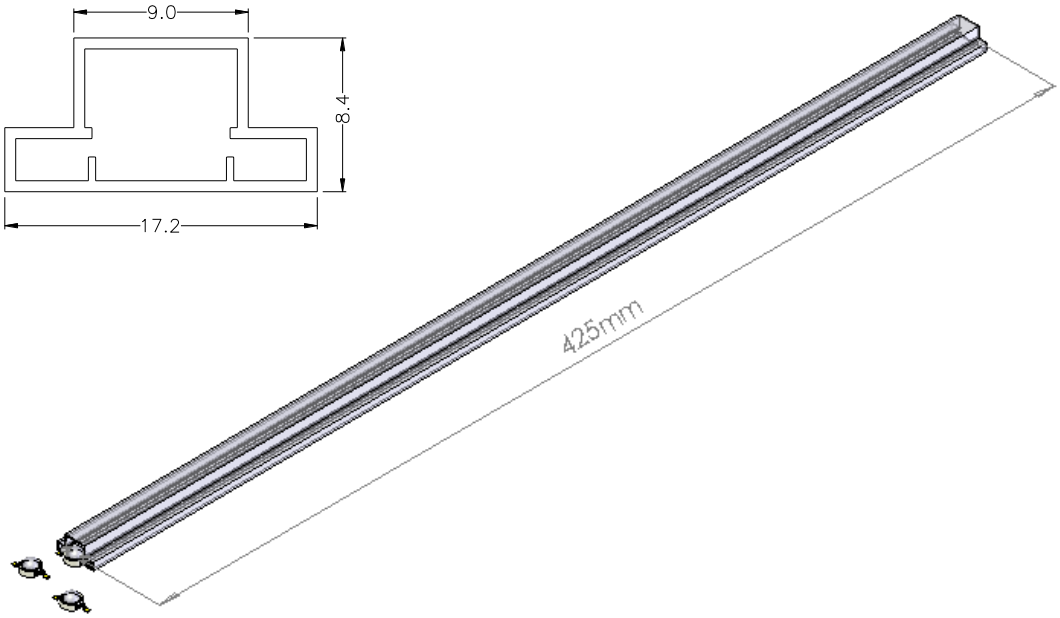

Notes:
1. 50 pieces per tube.
2. Drawing not to scale.
3. All dimensions are in millimeters.
4. All dimendions without tolerances are for reference only.

**Please do not open the moisture barrier bag (MBB) more than one week. This may cause the leads of LED discoloration. We recommend storing ProLight's LEDs in a dry box after opening the MBB. The recommended storage conditions are temperature 5 to 30°C and humidity less than 40% RH.

Precaution for Use

- Storage
  Please do not open the moisture barrier bag (MBB) more than one week. This may cause the leads of LED discoloration. We recommend storing ProLight's LEDs in a dry box after opening the MBB. The recommended storage conditions are temperature 5 to 30°C and humidity less than 40% RH. It is also recommended to return the LEDs to the MBB and to reseal the MBB.
- The slug is is not electrically neutral. Therefore, we recommend to isolate the heat sink.
- The LEDs are sensitive to electrostatic discharge. Appropriate ESD protection measures must be taken when working with the LEDs. Non-compliance with ESD protection measures may lead to damage or destruction of the LEDs.
- **We recommend using the M705-S101-S4 solder paste from SMIC (Senju Metal Industry Co., Ltd.) for lead-free soldering.**
- **Electric Static Discharge (ESD) Protection**
  The LEDs are STATIC SENSITIVE device. ESD protection or surge voltages shall be considered and taken care in the initial design stage, and whole production process.
  The following protection is recommended:
  (1) A wrist band or an anti-electrostatic glove shall be used when handling the LEDs.
  (2) All devices, equipment and machinery must be properly grounded.
- Any mechanical force or any excess vibration shall not be accepted to apply during cooling process to normal temperature after soldering.
- Please avoid rapid cooling after soldering.
- Components should not be mounted on warped direction of PCB.
- Repairing should not be done after the LEDs have been soldered. When repairing is unavoidable, a heat plate should be used. It should be confirmed beforehand whether the characteristics of the LEDs will or will not be damaged by repairing.
- This device should not be used in any type of fluid such as water, oil, organic solvent and etc. When cleaning is required, isopropyl alcohol should be used.
- When the LEDs are illuminating, operating current should be decide after considering the package maximum temperature.
- The appearance, specifications and flux bin of the product may be modified for improvement without notice. Please refer to the below website for the latest datasheets.
  http://www.prolightopto.com/

Handling of Silicone Lens LEDs

Notes for handling of silicone lens LEDs
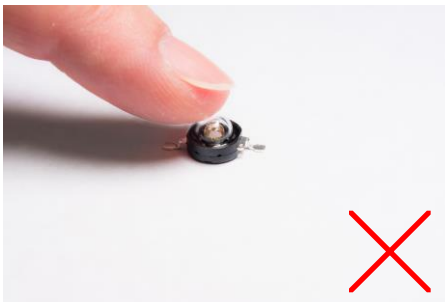
- Please do not use a force of over 3kgf impact or pressure on the silicone lens, otherwise it will cause a catastrophic failure.
- The LEDs should only be picked up by making contact with the sides of the LED body.
- Avoid touching the silicone lens especially by sharp tools such as Tweezers.
- Avoid leaving fingerprints on the silicone lens.
- Please store the LEDs away from dusty areas or seal the product against dust.
- When populating boards in SMT production, there are basically no restrictions regarding the form of the pick and place nozzle, except that mechanical pressure on the silicone lens must be prevented.
- Please do not mold over the silicone lens with another resin. (epoxy, urethane, etc)