ISO Cylinder ISO Standard (15552)

CP96 Series

ø32, ø40, ø50, ø63, ø80, ø100 RoHS

Lightweight Up to 15% Weight reduced

∗ Compared with the previous CP96 series (ø40, 100 mm stroke)

By adopting a new cushion method (Air cushion + Bumper cushion),

Cycle time shortened

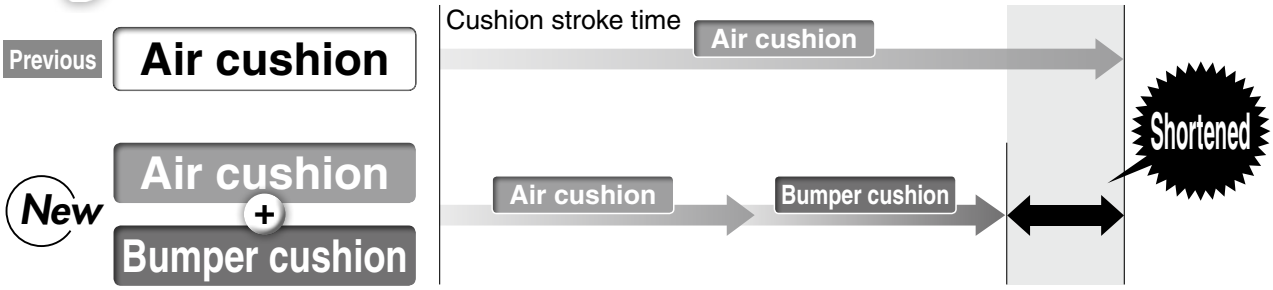

Bumper cushion reduces the metal noise that occurs when piston stops

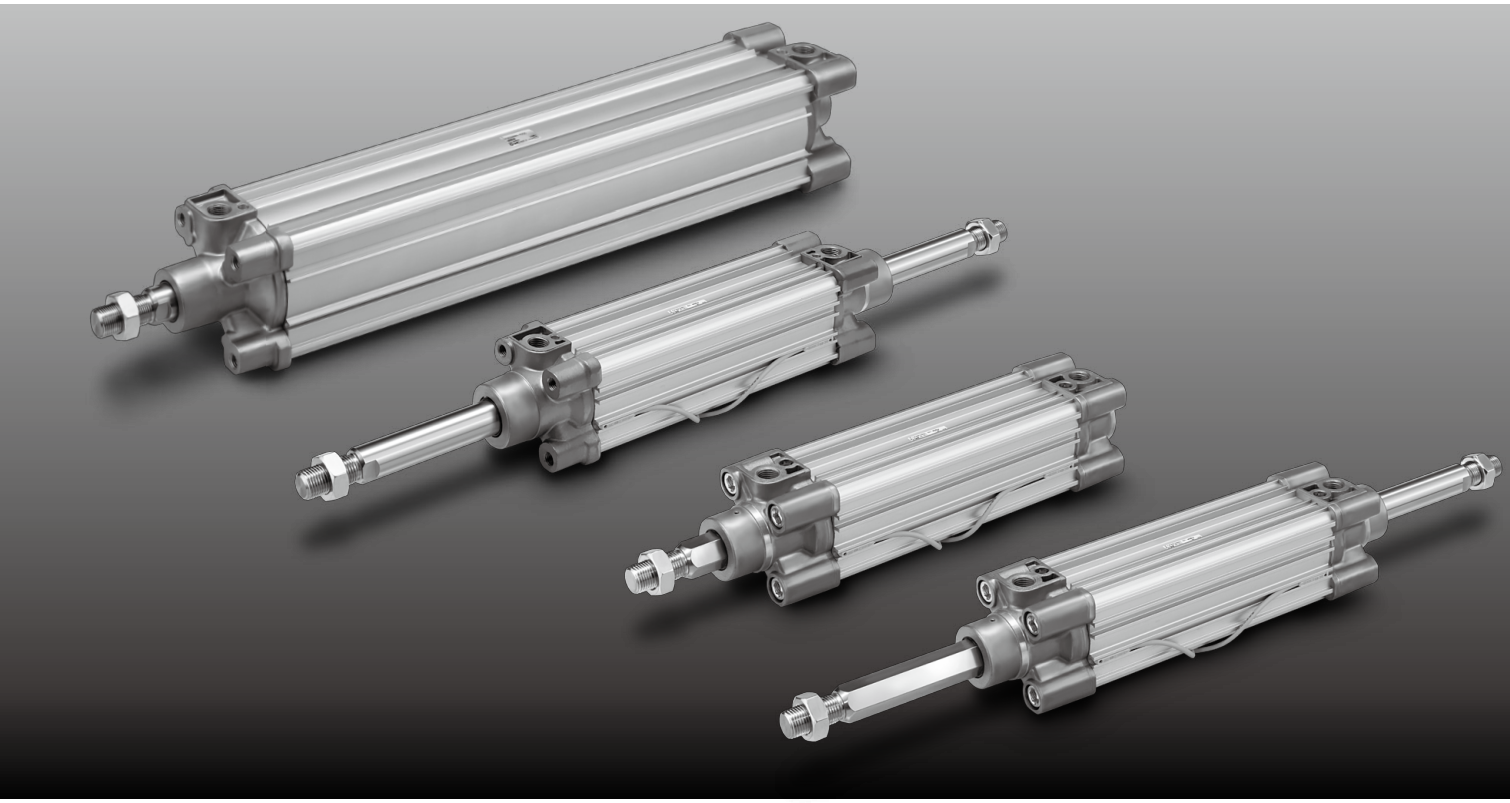

Weight reduced

Achieved weight reduction by changing rod cover shape and piston structure

[kg]

Bore size [mm]	CP96	Reduction rate
32	0.74	11%
40	1.02	15%
50	1.74	11%
63	2.12	12%
80	3.40	11%
100	4.33	11%

∗ Compared with the previous CP96 series (ø40, 100 mm stroke)

Air cushion + Bumper cushion Combined structure

- The cushion stroke time can now be reduced with the double cushioning, which improves the cycle time.
- The bumper cushion reduces the metal noise that occurs when the piston stops at the end of the stroke.

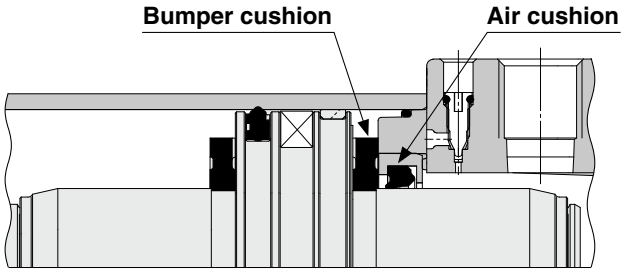

Rod end nut can be screwed up to TRP.

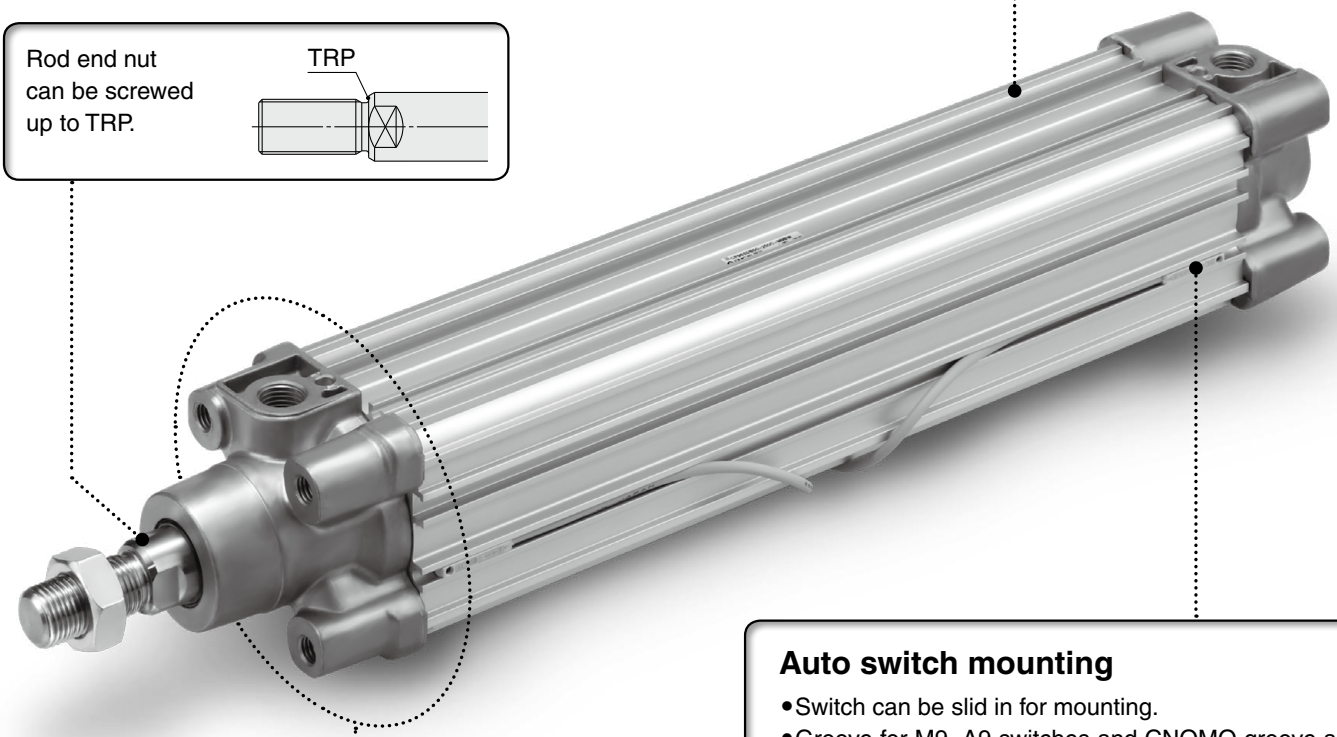

Auto switch mounting

- Switch can be slid in for mounting.
- Groove for M9, A9 switches and CNOMO groove are on all four sides. Max. four sides, slide-in mountable

Auto switch can be slid in.

Mountable from both the head end and the rod end.

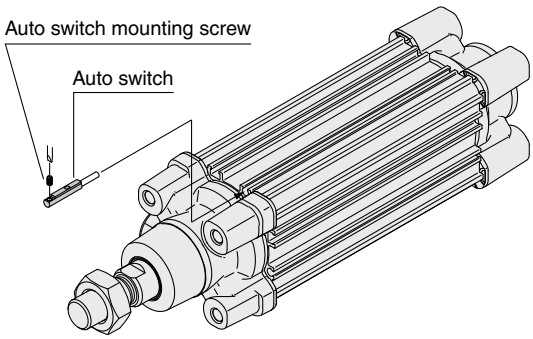

Auto switch mounting surface

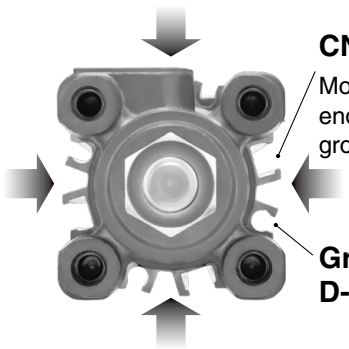

CNOMO grooves

Mount a switch from the head end for attaching to the CNOMO groove on the port surfaces.

Groove for the D-M9□, A9□ type

Various mounting bracket options

Mounting brackets can be combined according to the operating conditions.

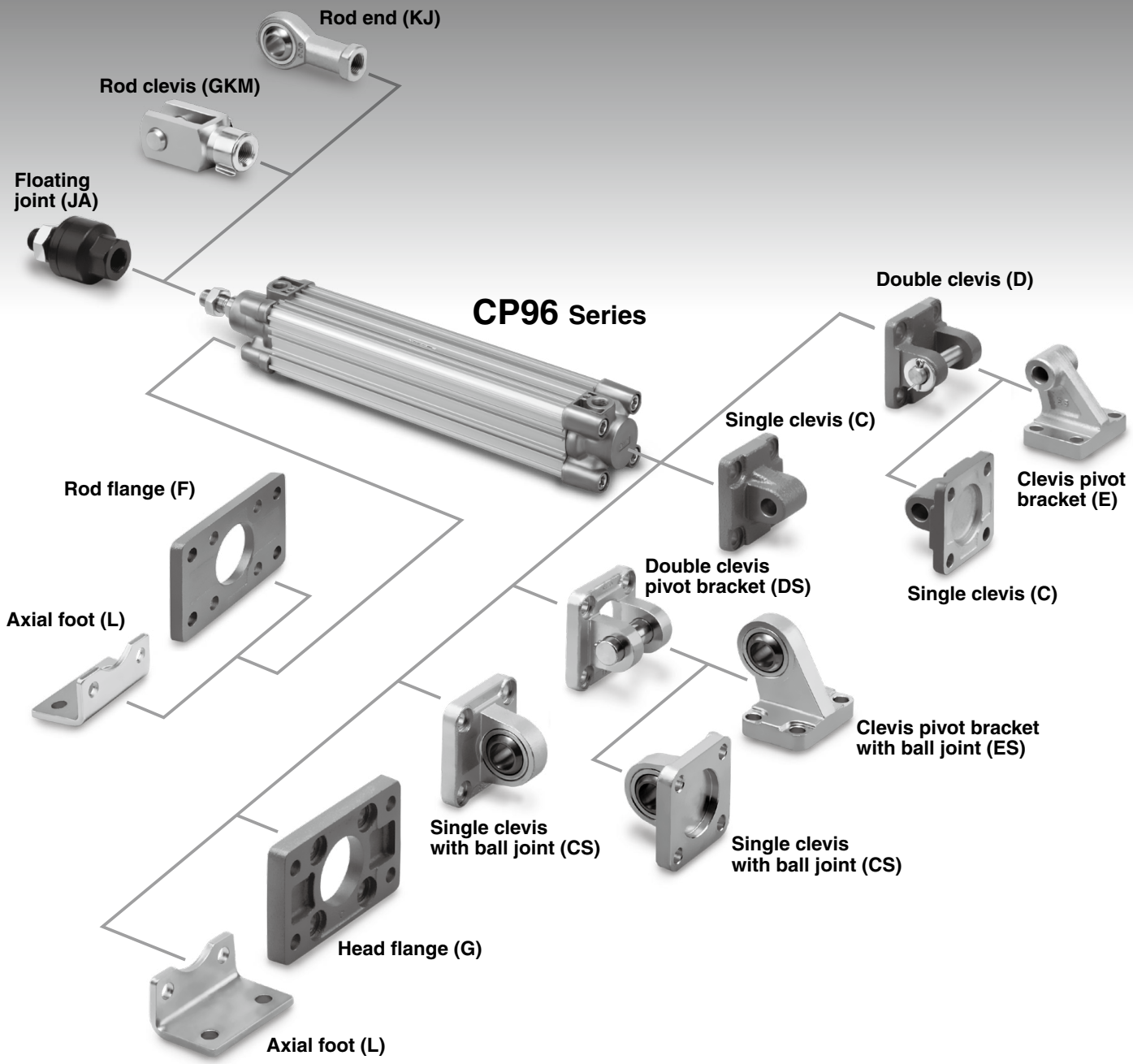

Series Variations

ISO Standards	Type	Action	Bore size [mm] 32	40	50	63	80	100	125	Page
ISO 15552	Standard CP96 Series 	Double acting, Single rod	●	●	●	●	●	●	●*1	129
		Double acting, Double rod	●	●	●	●	●	●	●*1	
	Non-rotating rod CP96K Series 	Double acting, Single rod	●	●	●	●	●	●		141
		Double acting, Double rod	●	●	●	●	●	●		

*1 Bore size 125 is the same as the previous model. For details, refer to the **Web Catalog**.

ISO Standard (15552)

Air Cylinder: Standard Type
Double Acting, Single/Double Rod

CP96 Series

ø32, ø40, ø50, ø63, ø80, ø100

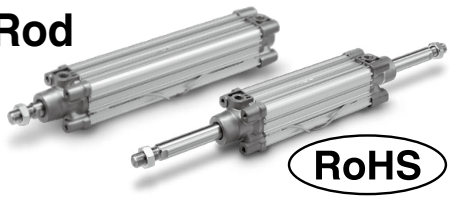

RoHS

The **CP96** series, standard type, ø125 is the same as the previous model. For details, refer to the **Web Catalog**.

How to Order

CP96S B 32 – 100 C J W – ☐

With auto switch CP96SD B 32 – 100 C J W – M9BW S – ☐

With auto switch
(Built-in magnet)

Mounting

B	Basic
L	Axial foot
F	Rod flange
G	Head flange
C	Single clevis
D	Double clevis

∗ Mounting brackets are shipped together, but not assembled.

Bore size

32	32 mm
40	40 mm
50	50 mm
63	63 mm
80	80 mm
100	100 mm

Cylinder stroke [mm]
Refer to "Standard Strokes" on page 130.

Air cushion on both ends + Bumper cushion

Rod boot

Nil	Without rod boot
J	Nylon tarpaulin (One end)
JJ	Nylon tarpaulin (Both ends)
K	Heat-resistant tarpaulin (One end)
KK	Heat-resistant tarpaulin (Both ends)

Rod

Nil	Single rod
W	Double rod

Number of auto switches

Nil	2
S	1
3	3
n	n

Auto switch

Nil	Without auto switch

∗ For applicable auto switches, refer to the table below.

Made to Order
Refer to page 130 for details.

Applicable Auto Switches/Refer to the **Web Catalog** or Best Pneumatics for further information on auto switches.

Type	Special function	Electrical entry	Indicator light	Wiring (Output)	Load voltage DC		Load voltage AC	Auto switch model	Lead wire length [m] 0.5 (Nil)	1 (M)	3 (L)	5 (Z)	Pre-wired connector	Applicable load	
Solid state auto switch	—	Grommet	Yes	3-wire (NPN)	24 V	5 V, 12 V	—	M9N	●	●	●	○	○	IC circuit	Relay, PLC
				3-wire (PNP)				M9P	●	●	●	○	○		
				2-wire		12 V		M9B	●	●	●	○	○	—	
	Diagnostic indication (2-color indicator)	Grommet		3-wire (NPN)		5 V, 12 V		M9NW	●	●	●	○	○	IC circuit	
				3-wire (PNP)				M9PW	●	●	●	○	○		
				2-wire		12 V		M9BW	●	●	●	○	○	—	
	Water-resistant (2-color indicator)			3-wire (NPN)		5 V, 12 V		M9NA∗1	○	○	●	○	○	IC circuit	
				3-wire (PNP)				M9PA∗1	○	○	●	○	○		
				2-wire		12 V		M9BA∗1	○	○	●	○	○	—	
Reed auto switch	—	Grommet	Yes	3-wire (NPN equivalent)	—	5 V	—	A96	●	—	●	—	—	IC circuit	—
			No	2-wire	24 V	12 V	100 V	A93	●	●	●	●	—	—	Relay, PLC
							100 V or less	A90	●	—	●	—	—	IC circuit	

∗1 Water-resistant type auto switches can be mounted on the above models, but SMC cannot guarantee water resistance.

∗ Lead wire length symbols: 0.5 m ····· Nil (Example) M9NW
1 m ····· M (Example) M9NWM
3 m ····· L (Example) M9NWL
5 m ····· Z (Example) M9NWZ

∗ Solid state auto switches marked with "○" are produced upon receipt of order.

∗ Since there are other applicable auto switches than listed above, refer to page 146 for details.
∗ The D-A9□/M9□/M9□W/M9□A auto switches are shipped together, but not assembled.
(Only the auto switch mounting brackets are assembled before shipment.)
∗ The D-Y59A, Y69A, Y7P, Y7□W, Z7□, Z80 cannot be mounted on the CP96 series.
Moreover, the D-M9□□ and A9□ auto switches cannot be mounted on square groove of the CP96 series.

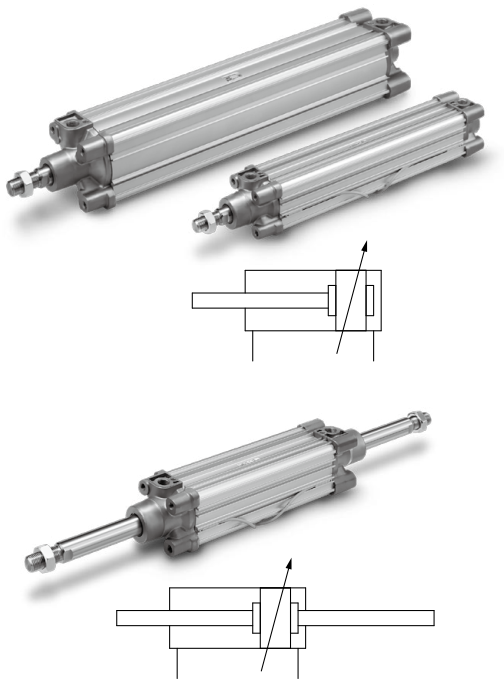

Specifications

Bore size [mm]	32	40	50	63	80	100
Action	Double acting					
Fluid	Air					
Proof pressure	1.5 MPa					
Max. operating pressure	1.0 MPa					
Min. operating pressure	0.05 MPa					
Ambient and fluid temperature	Without auto switch: –20 to 70°C (No freezing) With auto switch: –10 to 60°C (No freezing)					
Lubrication	Not required (Non-lube)					
Operating piston speed	50 to 1000 mm/s					
Allowable stroke tolerance	Up to 500 stroke: $^{+2}_{0}$, 501 to 1000 stroke: $^{+2.4}_{0}$, 1001 to 1500 stroke: $^{+2.8}_{0}$, 1501 to 2000 stroke: $^{+3.2}_{0}$					
Cushion	Air cushion on both ends + Bumper cushion					
Port size	G 1/8	G 1/4	G 1/4	G 3/8	G 3/8	G 1/2
Mounting	Basic, Axial foot, Rod flange, Head flange, Single clevis, Double clevis					

Standard Strokes

Bore size [mm]	Standard stroke [mm]	Max. stroke*1
32	25, 50, 80, 100, 125, 160, 200, 250, 320, 400, 500	2000
40	25, 50, 80, 100, 125, 160, 200, 250, 320, 400, 500	2000
50	25, 50, 80, 100, 125, 160, 200, 250, 320, 400, 500, 600	2000
63	25, 50, 80, 100, 125, 160, 200, 250, 320, 400, 500, 600	2000
80	25, 50, 80, 100, 125, 160, 200, 250, 320, 400, 500, 600, 700, 800	2000
100	25, 50, 80, 100, 125, 160, 200, 250, 320, 400, 500, 600, 700, 800	2000

Intermediate strokes are available.
*1 Please consult with SMC for longer strokes.

Accessories

Mounting		Basic	Foot	Rod flange	Head flange	Single clevis	Double clevis
Standard	Rod end nut	●	●	●	●	●	●
	Clevis pin	—	—	—	—	—	●
Option	Rod end	●	●	●	●	●	●
	Rod clevis	●	●	●	●	●	●
	Rod boot	●	●	●	●	●	●

* Do not use a rod end (or floating joint) together with a single clevis with a ball joint (or clevis pivot bracket with a ball joint).
* Refer to pages 137 to 140 for dimensions and part numbers of the accessories.

Made to Order

Made to Order
(For details, refer to pages 148 to 155.)

Symbol	Specifications
-XA□	Change of rod end shape
-XB6	Heat-resistant cylinder (–10 to 150°C)
-XC4	With heavy duty scraper
-XC7	Tie-rod, tie-rod nut, etc. made of stainless steel
-XC10	Dual stroke cylinder/Double rod type
-XC11	Dual stroke cylinder/Single rod type
-XC22	Fluororubber seal
-XC35	With coil scraper
-XC65	Made of stainless steel (Combination of -XC7 and -XC68)
-XC68	Made of stainless steel (with hard chrome plated piston rod)
-XC88	Spatter-resistant coil scraper, Lube-retainer, grease for welding (Piston rod: Stainless steel 304)
-XC89	Spatter-resistant coil scraper, Lube-retainer, grease for welding (Piston rod: S45C)

Refer to pages 145 and 146 for cylinders with auto switches.

· Auto Switch Proper Mounting Position (Detection at stroke end)
· Minimum Stroke for Auto Switch Mounting
· Operating Range
· How to Mount and Move the Auto Switch

⚠ Precautions

Be sure to read this before handling the products. Refer to page 219 for safety instructions. For actuator and auto switch precautions, refer to the "Handling Precautions for SMC Products" and the "Operation Manual" on the SMC website: http://www.smcworld.com

Theoretical Output

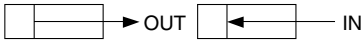

[N]

Bore size [mm]	Rod size [mm]	Operating direction	Piston area [mm²]	Operating pressure [MPa]								
				0.2	0.3	0.4	0.5	0.6	0.7	0.8	0.9	1.0
32	12	OUT	804	161	241	322	402	482	563	643	724	804
		IN	691	138	207	276	346	415	484	553	622	691
40	16	OUT	1257	251	377	503	629	754	880	1006	1131	1257
		IN	1056	211	317	422	528	634	739	845	950	1056
50	20	OUT	1963	393	589	785	982	1178	1374	1570	1767	1963
		IN	1649	330	495	660	825	989	1154	1319	1484	1649
63	20	OUT	3117	623	935	1247	1559	1870	2182	2494	2805	3117
		IN	2803	561	841	1121	1402	1682	1962	2242	2523	2803
80	25	OUT	5027	1005	1508	2011	2514	3016	3519	4022	4524	5027
		IN	4536	907	1361	1814	2268	2722	3175	3629	4082	4536
100	25	OUT	7854	1571	2356	3142	3927	4712	5498	6283	7068	7854
		IN	7363	1473	2209	2945	3682	4418	5154	5890	6627	7363

∗ Theoretical output [N] = Pressure [MPa] x Piston area [mm²]

Weights

[kg]

Bore size [mm]		32	40	50	63	80	100
Basic weight	Basic	0.46	0.66	1.14	1.48	2.42	3.25
	Foot	0.16	0.20	0.38	0.46	0.89	1.09
	Flange	0.20	0.23	0.47	0.58	1.30	1.81
	Single clevis	0.16	0.23	0.37	0.60	1.07	1.73
	Double clevis	0.20	0.32	0.45	0.71	1.28	2.11
Additional weight per 50 mm of stroke	All mounting brackets	0.14	0.18	0.30	0.32	0.49	0.54
Accessories	Rod end	0.07	0.11	0.22		0.40	
	Rod clevis	0.09	0.15	0.34		0.69	

Calculation: Example) **CP96SD40-100C**

- Basic weight ····· 0.66 [kg] (Basic, ø40)
- Additional weight ····· 0.18 (kg/50 st)
- Cylinder stroke ····· 100 [st]
- Mounting bracket weight ····· 0.32 [kg] (Double clevis)

0.66 + 0.18 x 100 ÷ 50 + 0.32 = **1.32 kg**

Allowable Kinetic Energy

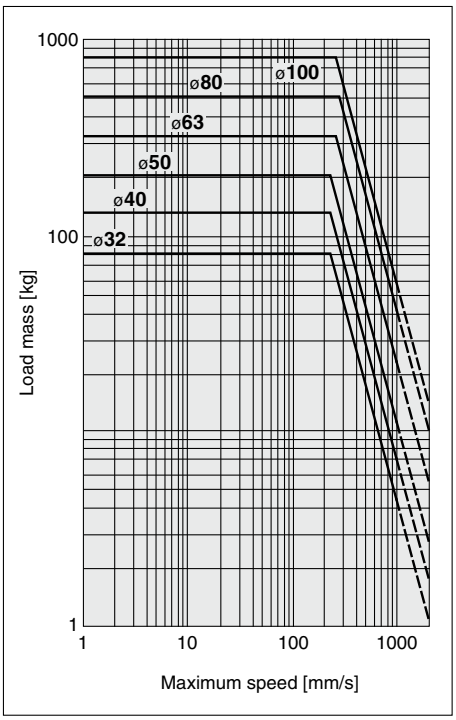

(Example) Find the upper limit of rod end load when an air cylinder of ø63 is operated at 500 mm/s. From a point indicating 500 mm/s on the axis of abscissas, extend a line upward and find a point where it intersects with a line for the 63 mm bore size. Extend a line from the intersection to the left and find a load mass 80 kg.

Construction

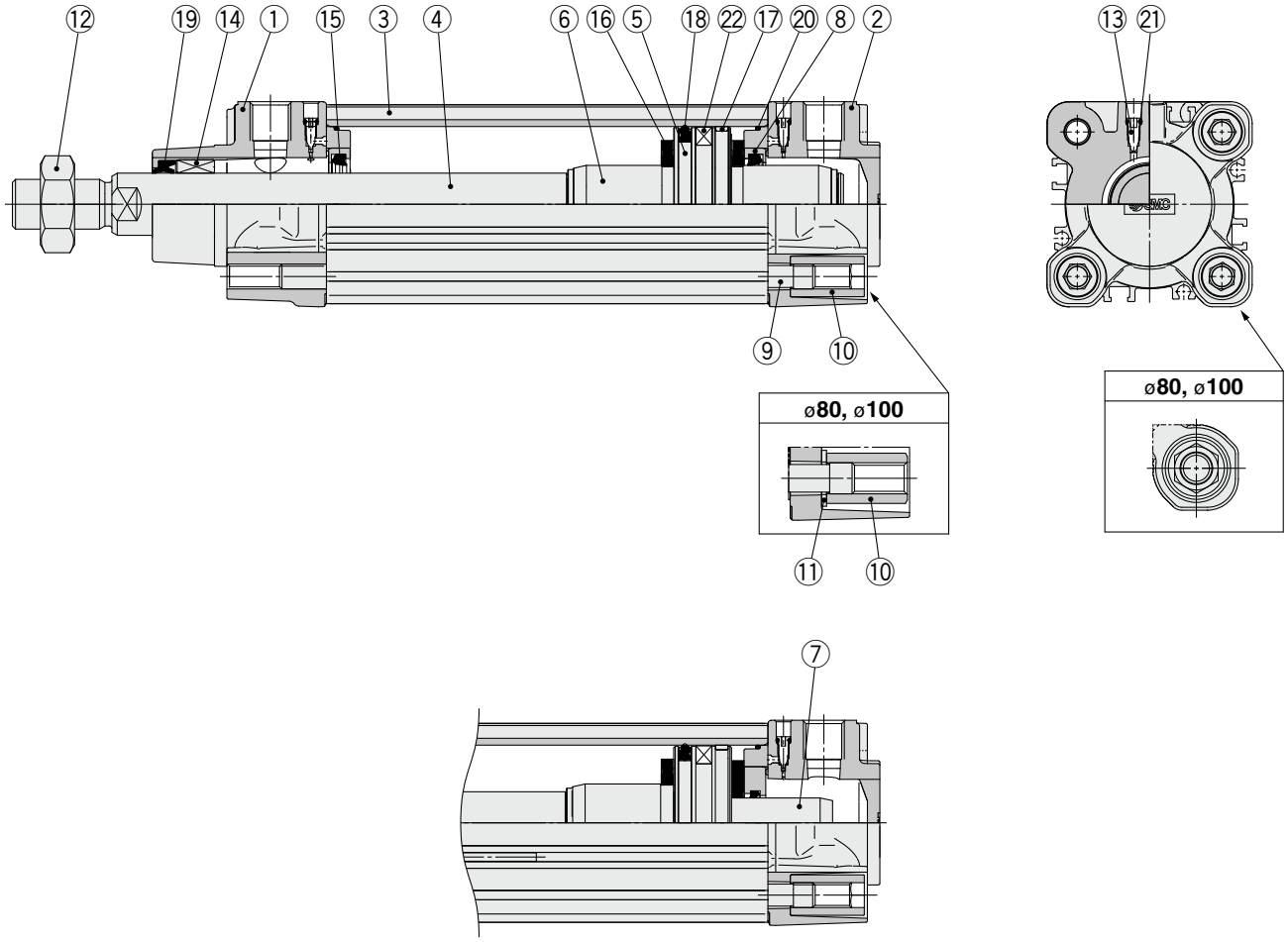

Component Parts

No.	Description	Material	Note
1	**Rod cover**	Aluminum die-cast	
2	**Head cover**	Aluminum die-cast	
3	**Cylinder tube**	Aluminum alloy	
4	**Piston rod**	Carbon steel	
5	**Piston**	Aluminum alloy	ø32 to ø63
		Aluminum die-cast	ø80, ø100
6	**Cushion ring A**	Aluminum alloy	
7	**Cushion ring B**	Aluminum alloy	
8	**Cushion seal holder**	Aluminum alloy	
9	**Tie-rod**	Carbon steel	
10	**Tie-rod nut**	Steel	
11	**Flat washer**	Steel	ø80, ø100
12	**Rod end nut**	Steel	
13	**Cushion valve**	Resin	
14	**Bushing**	Bearing alloy	
15	**Cushion seal**	Urethane	
16	**Bumper**	Urethane	
17	**Wear ring**	Resin	
18	**Piston seal**	NBR	
19	**Rod seal**	NBR	
20	**Cylinder tube gasket**	NBR	
21	**Cushion valve seal**	NBR	
22	**Magnet**		

Replacement Parts/Seal Kit (Single rod)

Bore size [mm]	Kit no.	Contents
32	CS95-32	Kits include items ⑮, ⑰ to ⑳.
40	CS95-40	
50	CS95-50	
63	CS95-63	
80	CS95-80	
100	CS96-100	

∗ Seal kits consist of items ⑮, ⑰ to ⑳ and can be ordered by using the seal kit number corresponding to each bore size.
∗ The seal kit includes a grease pack (10 g for ø32 to ø50, 20 g for ø63 and ø80, 30 g for ø100).
Order with the following part number when only the grease pack is needed.
Grease pack part number: GR-S-010 (10 g), **GR-S-020** (20 g)

Seal Kit (Double rod)

Bore size [mm]	Kit no.	Contents
32	CS95W-32	Kits include items ⑮, ⑱ to ⑳.
40	CS95W-40	
50	CS95W-50	
63	CS95W-63	
80	CS95W-80	
100	CS96W-100	

∗ Seal kits consist of items ⑮, ⑱ to ⑳ and can be ordered by using the seal kit number corresponding to each bore size.
∗ The seal kit includes a grease pack (10 g for ø32 to ø50, 20 g for ø63 and ø80, 30 g for ø100).
Order with the following part number when only the grease pack is needed.
Grease pack part number: GR-S-010 (10 g), **GR-S-020** (20 g)

Dimensions

Basic: CP96S (D) B Bore size – Stroke C (J)

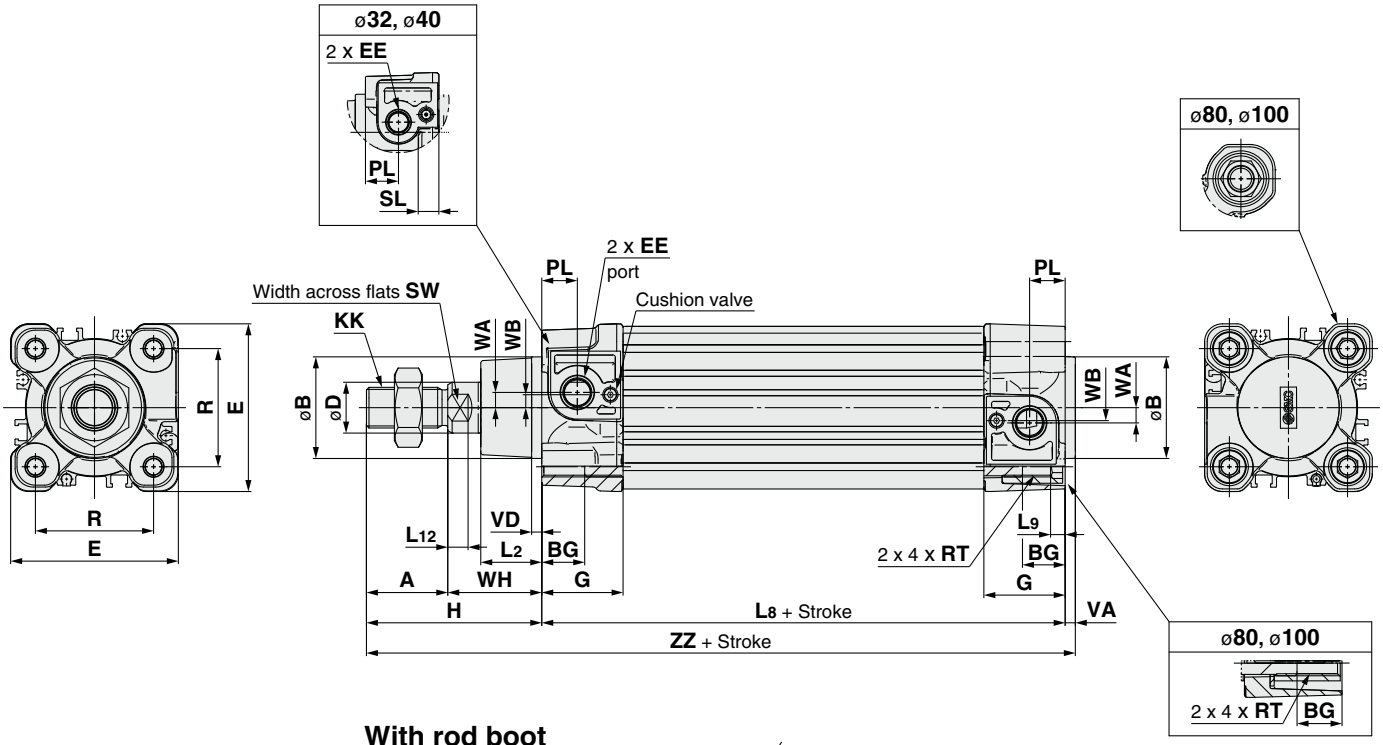

With rod boot

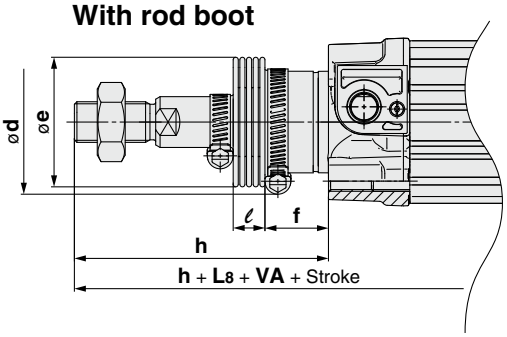

Bore size [mm]	Stroke range [mm] Without rod boot	Stroke range [mm] With rod boot	A	øB d11	BG	øD	E	EE	G	H	KK	L2	L8	L9	L12	PL	R	RT	SL	SW	VA	VD	WA	WB	WH	ZZ
32	Up to 2000	Up to 1000	22	30	16	12	47	G 1/8	28.9	48	M10 x 1.25	15	94	4	6	13	32.5	M6 x 1	8	10	4	4	4	7	26	146
40	Up to 2000	Up to 1000	24	35	16	16	54	G 1/4	32.6	54	M12 x 1.25	17	105	4	6.5	14	38	M6 x 1	8	13	4	4	5	8.9	30	163
50	Up to 2000	Up to 1000	32	40	16	20	66	G 1/4	32	69	M16 x 1.5	24	106	5	8	14	46.5	M8 x 1.25	—	17	4	4	6	5.1	37	179
63	Up to 2000	Up to 1000	32	45	16	20	77	G 3/8	38.6	69	M16 x 1.5	24	121	5	8	16	56.5	M8 x 1.25	—	17	4	4	9	6.3	37	194
80	Up to 2000	Up to 1000	40	45	17	25	99	G 3/8	38.4	86	M20 x 1.5	30	128	—	10	16	72	M10 x 1.5	—	22	4	4	11.5	6	46	218
100	Up to 2000	Up to 1000	40	55	17	25	118	G 1/2	42.9	91	M20 x 1.5	32	138	—	10	18	89	M10 x 1.5	—	22	4	4	17	10	51	233

Bore size [mm]	H	ød	øe	f	ℓ 1 to 50	ℓ 51 to 100	ℓ 101 to 150	ℓ 151 to 200	ℓ 201 to 300	ℓ 301 to 400	ℓ 401 to 500	ℓ 501 to 600	ℓ 601 to 700	ℓ 701 to 800	ℓ 801 to 900	ℓ 901 to 1000	h 1 to 50	h 51 to 100	h 101 to 150	h 151 to 200	h 201 to 300	h 301 to 400	h 401 to 500	h 501 to 600	h 601 to 700	h 701 to 800	h 801 to 900	h 901 to 1000
32	48	54	36	23	12.5	25	37.5	50	75	100	125	150	175	200	225	250	75	88	100	113	138	163	188	213	238	263	288	313
40	54	54	36	23	12.5	25	37.5	50	75	100	125	150	175	200	225	250	75	88	100	113	138	163	188	213	238	263	288	313
50	69	64	51	25	12.5	25	37.5	50	75	100	125	150	175	200	225	250	87	100	112	125	150	175	200	225	250	275	300	325
63	69	64	51	25	12.5	25	37.5	50	75	100	125	150	175	200	225	250	87	100	112	125	150	175	200	225	250	275	300	325
80	86	68	56	30	12.5	25	37.5	50	75	100	125	150	175	200	225	250	103	116	128	141	166	191	216	241	266	291	316	341
100	91	76	56	32	12.5	25	37.5	50	75	100	125	150	175	200	225	250	103	116	128	141	166	191	216	241	266	291	316	341

Dimensions

Basic: CP96S (D) B Bore size – Stroke C (J) W

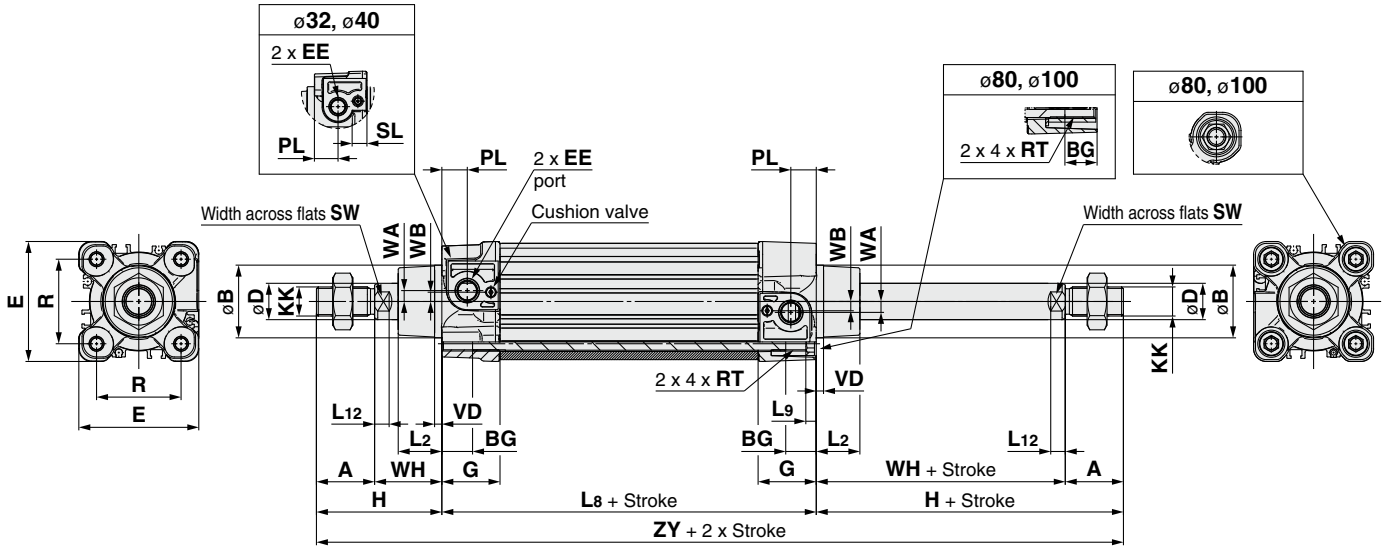

With rod boot at one end

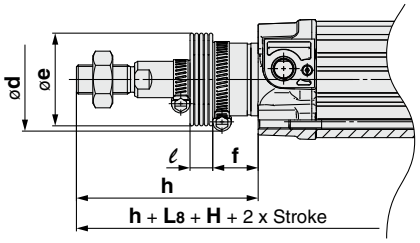

Bore size [mm]	Stroke range [mm]	A	øB d11	øD	EE	PL	RT	L12	KK	SW	G	BG	L8	VD	WA	WB	WH	ZY	E	R	L2	L9	H	SL
32	Up to 1000	22	30	12	G 1/8	13	M6 x 1	6	M10 x 1.25	10	28.9	16	94	4	4	7	26	190	47	32.5	15	4	48	8
40	Up to 1000	24	35	16	G 1/4	14	M6 x 1	6.5	M12 x 1.25	13	32.6	16	105	4	5	8.9	30	213	54	38	17	4	54	8
50	Up to 1000	32	40	20	G 1/4	14	M8 x 1.25	8	M16 x 1.5	17	32	16	106	4	6	5.1	37	244	66	46.5	24	5	69	—
63	Up to 1000	32	45	20	G 3/8	16	M8 x 1.25	8	M16 x 1.5	17	38.6	16	121	4	9	6.3	37	259	77	56.5	24	5	69	—
80	Up to 1000	40	45	25	G 3/8	16	M10 x 1.5	10	M20 x 1.5	22	38.4	17	128	4	11.5	6	46	300	99	72	30	—	86	—
100	Up to 1000	40	55	25	G 1/2	18	M10 x 1.5	10	M20 x 1.5	22	42.9	17	138	4	17	10	51	320	118	89	32	—	91	—

Bore size [mm]	øe	ød	f	ℓ											h											
				1 to 50	51 to 100	101 to 150	151 to 200	201 to 300	301 to 400	401 to 500	501 to 600	601 to 700	701 to 800	801 to 900	901 to 1000	1 to 50	51 to 100	101 to 150	151 to 200	201 to 300	301 to 400	401 to 500	501 to 600	601 to 700	701 to 800	801 to 900	901 to 1000
32	36	54	23	12.5	25	37.5	50	75	100	125	150	175	200	225	250	75	88	100	113	138	163	188	213	238	263	288	313
40	36	54	23	12.5	25	37.5	50	75	100	125	150	175	200	225	250	75	88	100	113	138	163	188	213	238	263	288	313
50	51	64	25	12.5	25	37.5	50	75	100	125	150	175	200	225	250	87	100	112	125	150	175	200	225	250	275	300	325
63	51	64	25	12.5	25	37.5	50	75	100	125	150	175	200	225	250	87	100	112	125	150	175	200	225	250	275	300	325
80	56	68	30	12.5	25	37.5	50	75	100	125	150	175	200	225	250	103	116	128	141	166	191	216	241	266	291	316	341
100	56	76	32	12.5	25	37.5	50	75	100	125	150	175	200	225	250	103	116	128	141	166	191	216	241	266	291	316	341

Dimensions

Basic: CP96S (D) B Bore size – Stroke C (JJ) W

With rod boot at both ends

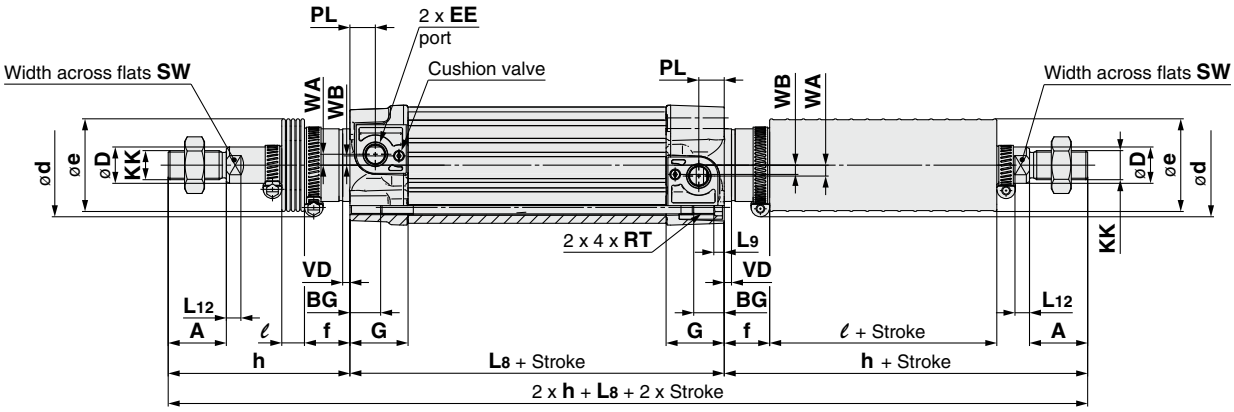

Bore size [mm]	Stroke range [mm]	A	øD	EE	PL	RT	L_{12}	KK	SW	G	BG	L_8	VD	WA	WB	E	R	L_9	SL
32	Up to 1000	22	12	G 1/8	13	M6 x 1	6	M10 x 1.25	10	28.9	16	94	4	4	7	47	32.5	4	8
40	Up to 1000	24	16	G 1/4	14	M6 x 1	6.5	M12 x 1.25	13	32.6	16	105	4	5	8.9	54	38	4	8
50	Up to 1000	32	20	G 1/4	14	M8 x 1.25	8	M16 x 1.5	17	32	16	106	4	6	5.1	66	46.5	5	—
63	Up to 1000	32	20	G 3/8	16	M8 x 1.25	8	M16 x 1.5	17	38.6	16	121	4	9	6.3	77	56.5	5	—
80	Up to 1000	40	25	G 3/8	16	M10 x 1.5	10	M20 x 1.5	22	38.4	17	128	4	11.5	6	99	72	—	—
100	Up to 1000	40	25	G 1/2	18	M10 x 1.5	10	M20 x 1.5	22	42.9	17	138	4	17	10	118	89	—	—

Bore size [mm]	øe	ød	f	ℓ												h											
				1 to 50	51 to 100	101 to 150	151 to 200	201 to 300	301 to 400	401 to 500	501 to 600	601 to 700	701 to 800	801 to 900	901 to 1000	1 to 50	51 to 100	101 to 150	151 to 200	201 to 300	301 to 400	401 to 500	501 to 600	601 to 700	701 to 800	801 to 900	901 to 1000
32	36	54	23	12.5	25	37.5	50	75	100	125	150	175	200	225	250	75	88	100	113	138	163	188	213	238	263	288	313
40	36	54	23	12.5	25	37.5	50	75	100	125	150	175	200	225	250	75	88	100	113	138	163	188	213	238	263	288	313
50	51	64	25	12.5	25	37.5	50	75	100	125	150	175	200	225	250	87	100	112	125	150	175	200	225	250	275	300	325
63	51	64	25	12.5	25	37.5	50	75	100	125	150	175	200	225	250	87	100	112	125	150	175	200	225	250	275	300	325
80	56	68	30	12.5	25	37.5	50	75	100	125	150	175	200	225	250	103	116	128	141	166	191	216	241	266	291	316	341
100	56	76	32	12.5	25	37.5	50	75	100	125	150	175	200	225	250	103	116	128	141	166	191	216	241	266	291	316	341

Dimensions: With Mounting Bracket (Dimensions are common to single rod and double rod.)

Axial foot (L)

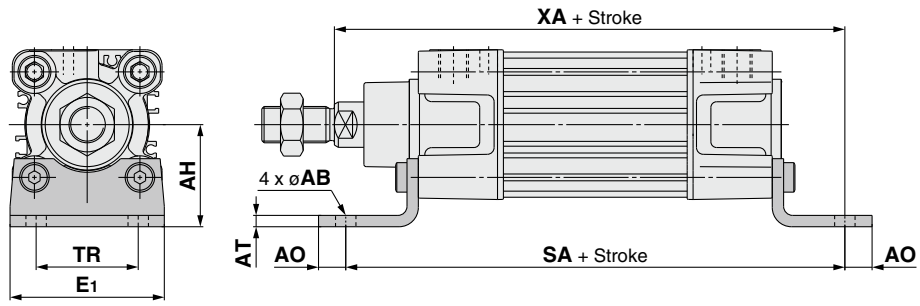

[mm]

Bore size [mm]	E1	TR	AH	AO	AT	AB	SA	XA
32	48	32	32	10	4.5	7	142	144
40	55	36	36	11	4.5	10	161	163
50	68	45	45	12	5.5	10	170	175
63	80	50	50	12	5.5	10	185	190
80	100	63	63	14	6.5	12	210	215
100	120	75	71	16	6.5	14.5	220	230

Rod flange (F)

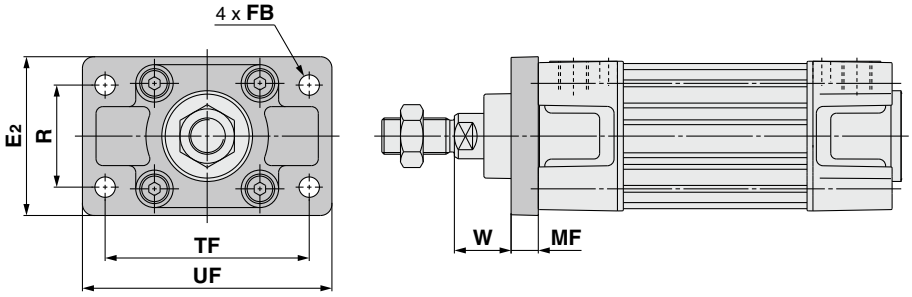

[mm]

Bore size [mm]	R	TF	FB	E2	UF	W	MF
32	32	64	7	50	79	16	10
40	36	72	9	55	90	20	10
50	45	90	9	70	110	25	12
63	50	100	9	80	120	25	12
80	63	126	12	100	153	30	16
100	75	150	14	120	178	35	16

Head flange (G)

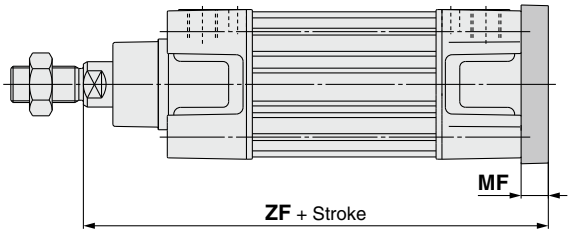

[mm]

Bore size [mm]	MF	ZF
32	10	130
40	10	145
50	12	155
63	12	170
80	16	190
100	16	205

Single clevis (C)
Double clevis (D)

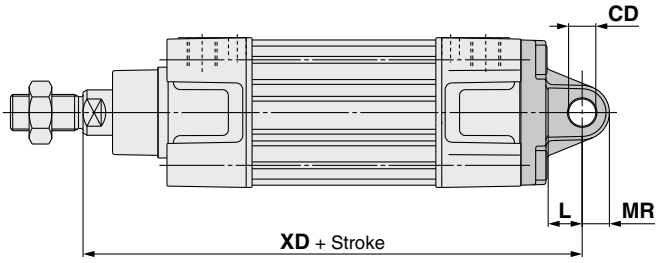

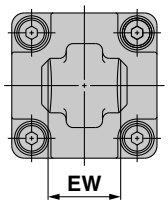

Single clevis (C)

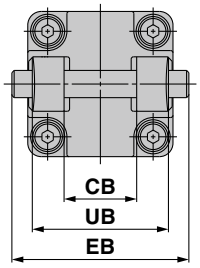

Double clevis (D)

[mm]

Bore size [mm]	EW	CD H9	L	MR	XD	UB h14	CB H14	EB
32	$26^{-0.2}_{-0.6}$	10	12	9.5	142	45	26	65
40	$28^{-0.2}_{-0.6}$	12	15	12	160	52	28	75
50	$32^{-0.2}_{-0.6}$	12	15	12	170	60	32	80
63	$40^{-0.2}_{-0.6}$	16	20	16	190	70	40	90
80	$50^{-0.2}_{-0.6}$	16	20	16	210	90	50	110
100	$60^{-0.2}_{-0.6}$	20	25	20	230	110	60	140

Accessories

Dimensions: Mounting Brackets

Axial foot (L)

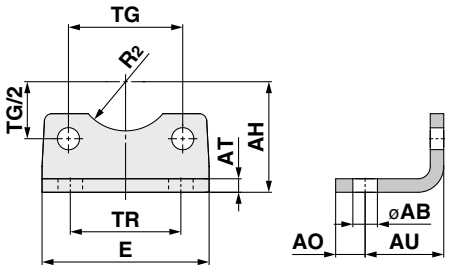

[mm]

Bore size [mm]	Part no.	AB	TG ±0.2	E	TR	AO	AU	AH	AT	R_2	Screw size
32	**L5032**	7	32.5	48	32	10	24	32	4.5	15	M6 x 16L
40	**L5040**	10	38	55	36	11	28	36	4.5	17.5	M6 x 16L
50	**L5050**	10	46.5	68	45	12	32	45	5.5	20	M8 x 20L
63	**L5063**	10	56.5	80	50	12	32	50	5.5	22.5	M8 x 20L
80	**L5080**	12	72	100	63	14	41	63	6.5	22.5	M10 x 20L
100	**L5100**	14.5	89	120	75	16	41	71	6.5	27.5	M10 x 20L

∗ Supplied with 4 mounting screws.

Flange (F, G)

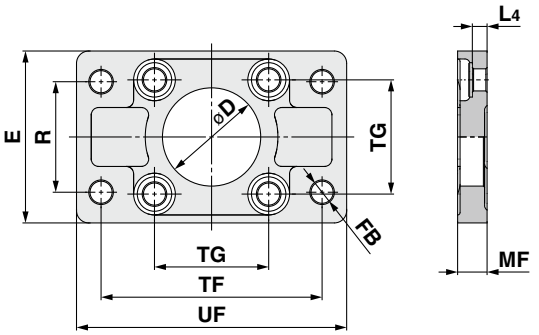

[mm]

Bore size [mm]	Part no.	D H11	øFB	TG ±0.2	E	R	MF	TF	UF	L_4	Screw size
32	**F5032**	30	7	32.5	50	32	10	64	79	5	M6 x 20L
40	**F5040**	35	9	38	55	36	10	72	90	5	M6 x 20L
50	**F5050**	40	9	46.5	70	45	12	90	110	6.5	M8 x 20L
63	**F5063**	45	9	56.5	80	50	12	100	120	6.5	M8 x 20L
80	**F5080**	45	12	72	100	63	16	126	153	9	M10 x 25L
100	**F5100**	55	14	89	120	75	16	150	178	9	M10 x 25L

∗ Supplied with 4 mounting screws.

Single clevis (C)

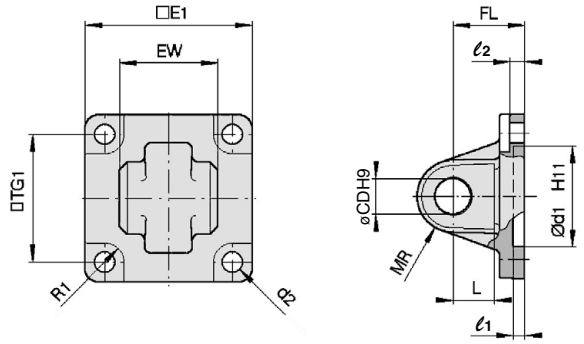

[mm]

Bore size [mm]	Part no.	E_1	EW	TG_1	FL	ℓ_1	L	ℓ_2	ød_1	øCD	MR	ød_2	R_1
32	**C5032**	45	$26^{-0.2}_{-0.6}$	32.5	22	5	12	5.5	30	10	9.5	6.6	6.5
40	**C5040**	51	$28^{-0.2}_{-0.6}$	38	25	5	15	5.5	35	12	12	6.6	6.5
50	**C5050**	64	$32^{-0.2}_{-0.6}$	46.5	27	5	15	6.5	40	12	12	9	8.5
63	**C5063**	74	$40^{-0.2}_{-0.6}$	56.5	32	5	20	6.5	45	16	16	9	8.5
80	**C5080**	94	$50^{-0.2}_{-0.6}$	72	36	5	20	10	45	16	16	11	11
100	**C5100**	113	$60^{-0.2}_{-0.6}$	89	41	5	25	10	55	20	20	11	12

∗ Supplied with 4 mounting screws.

Dimensions: Mounting Brackets, Pivot Brackets for Cylinder Mounting

Double clevis (D)

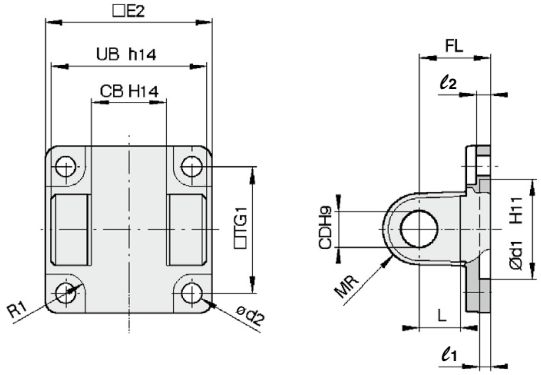

[mm]

Bore size [mm]	Part no.	TG1	FL	ℓ1	L	ℓ2	ød1	øCD	MR	ød2	R1	E2	UB	CB
32	D5032	32.5	22	5	12	5.5	30	10	9.5	6.6	6.5	48	45	26
40	D5040	38	25	5	15	5.5	35	12	12	6.6	6.5	56	52	28
50	D5050	46.5	27	5	15	6.5	40	12	12	9	8.5	64	60	32
63	D5063	56.5	32	5	20	6.5	45	16	16	9	8.5	75	70	40
80	D5080	72	36	5	20	10	45	16	16	11	11	95	90	50
100	D5100	89	41	5	25	10	55	20	20	11	12	115	110	60

∗ Supplied with 4 mounting screws, clevis pin, and clevis pin bracket.

Clevis pivot bracket (E)

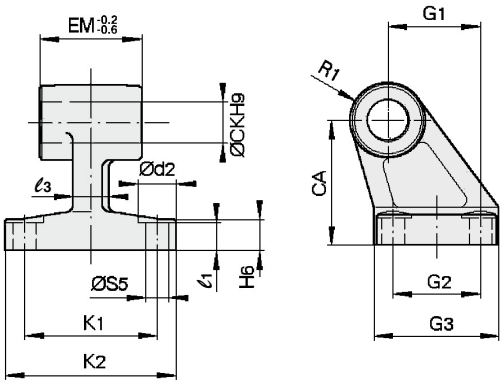

[mm]

Bore size [mm]	Part no.	ød2	øCK	øS5	K1	K2 (Max.)	ℓ3 (Max.)	G1	ℓ1	G2	EM	G3 (Max.)	CA	H6	R1
32	E5032	11	10	6.6	38	51	10	21	7	18	$26^{-0.2}_{-0.6}$	31	32	8	10
40	E5040	11	12	6.6	41	54	10	24	9	22	$28^{-0.2}_{-0.6}$	35	36	10	11
50	E5050	15	12	9	50	65	12	33	11	30	$32^{-0.2}_{-0.6}$	45	45	12	12
63	E5063	15	16	9	52	67	14	37	11	35	$40^{-0.2}_{-0.6}$	50	50	12	15
80	E5080	18	16	11	66	86	18	47	12.5	40	$50^{-0.2}_{-0.6}$	60	63	14	15
100	E5100	18	20	11	76	96	20	55	13.5	50	$60^{-0.2}_{-0.6}$	70	71	15	19

Single clevis with ball joint (CS)

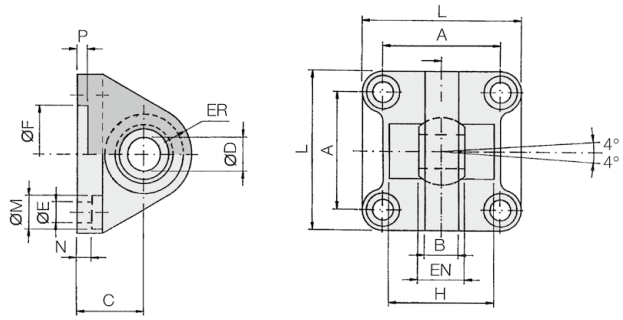

[mm]

Bore size [mm]	Part no.	A	B (Max.)	C	øDH7	EN 0 −0.1	ER (Max.)	øFH11	øE	L	øM	N	P	H ±0.5
32	CS5032	32.5	10.5	22	10	14	15	30	6.6	45	10.5	5.5	5	—
40	CS5040	38	12	25	12	16	18	35	6.6	55	11	5.5	5	—
50	CS5050	46.5	15	27	16	21	20	40	9	65	15	6.5	5	51
63	CS5063	56.5	15	32	16	21	23	45	9	75	15	6.5	5	—
80	CS5080	72	18	36	20	25	27	45	11	95	18	10	5	70
100	CS5100	89	18	41	20	25	30	55	11	115	18	10	5	—

∗ Supplied with 4 mounting screws.

Dimensions: Pivot Brackets for Cylinder Mounting

Double clevis pivot bracket (DS)/for ES accessory

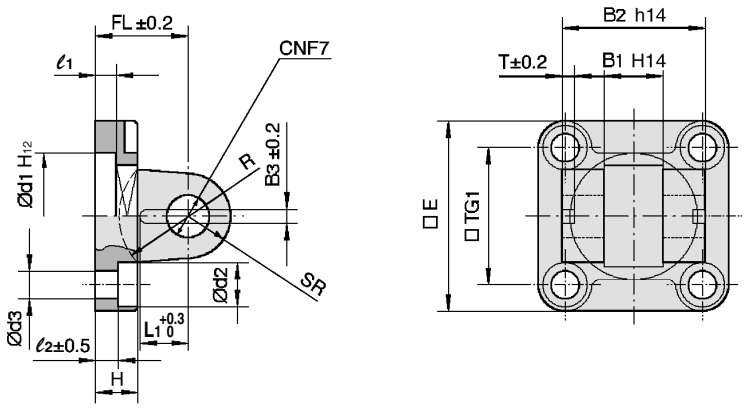

[mm]

Bore size [mm]	Part no.	E	B_1	B_2	B_3	L_1	TG_1	T	ℓ_1 (Min.)	ℓ_2	FL	H (Max.)	ød_1	ød_2	ød_3	øCN	SR (Max.)	R
32	**DS5032**	45	14	34	3.3	11.5	32.5	3	5	5.5	22	10	30	10.5	6.6	10	11	17
40	**DS5040**	55	16	40	4.3	12	38	4	5	5.5	25	10	35	11	6.6	12	13	20
50	**DS5050**	65	21	45	4.3	14	46.5	4	5	6.5	27	12	40	15	9	16	18	22
63	**DS5063**	75	21	51	4.3	14	56.5	4	5	6.5	32	12	45	15	9	16	18	25
80	**DS5080**	95	25	65	4.3	16	72	4	5	10	36	16	45	18	11	20	22	30
100	**DS5100**	115	25	75	6.3	16	89	4	5	10	41	16	55	18	11	20	22	32

∗ Supplied with 4 mounting screws, clevis pin, and clevis pin bracket.

Clevis pivot bracket with ball joint (ES)

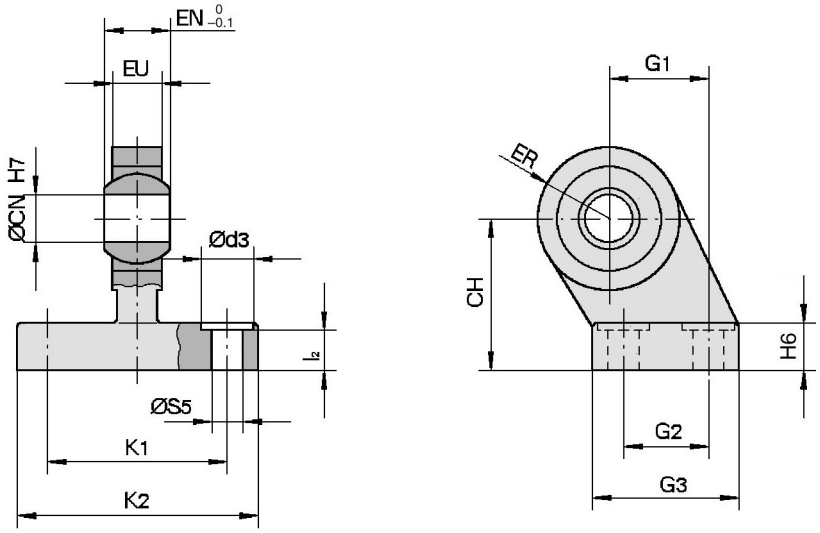

[mm]

Bore size [mm]	Part no.	ød_3	øCN	øS_5	K_1	K_2 (Max.)	ℓ_2	G_1	G_2	G_3 (Max.)	EN	EU	CH	H_6	ER (Max.)
32	**ES5032**	11	10	6.6	38	51	8.5	21	18	31	14	10.5	32	10	15
40	**ES5040**	11	12	6.6	41	54	8.5	24	22	35	16	12	36	10	18
50	**ES5050**	15	16	9	50	65	10.5	33	30	45	21	15	45	12	20
63	**ES5063**	15	16	9	52	67	10.5	37	35	50	21	15	50	12	23
80	**ES5080**	18	20	11	66	86	11.5	47	40	60	25	18	63	14	27
100	**ES5100**	18	20	11	76	96	12.5	55	50	70	25	18	71	15	30

Dimensions: Piston Rod Accessories

Floating joint: JA

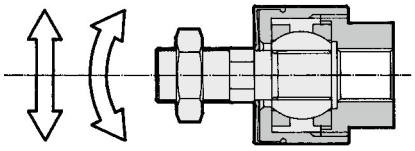

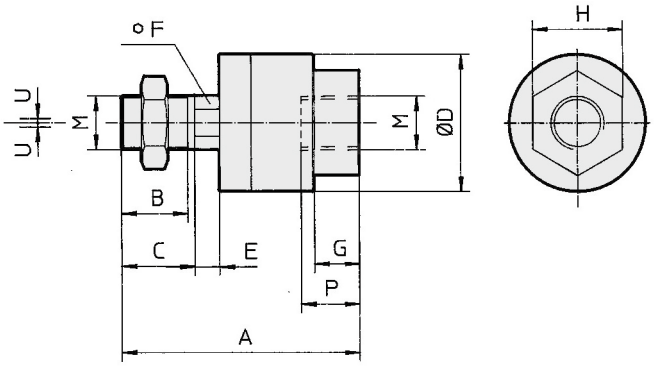

[mm]

Bore size [mm]	Part no.	M	A	B	C	øD	E	F	G	H	P	U	Load [kN]	Weight [g]	Angle
32	**JA30-10-125**	M10 x 1.25	49.5	19.5	—	24	5	8	8	17	9	0.5	2.5	70	±0.5°
40	**JA40-12-125**	M12 x 1.25	60	20	—	31	6	11	11	22	13	0.75	4.4	160	
50, 63	**JA50-16-150**	M16 x 1.5	71.5	22	—	41	7.5	14	13.5	27	15	1	11	300	
80, 100	**JAH50-20-150**	M20 x 1.5	101	28	31	59.5	11.5	24	16	32	18	2	18	1080	

∗ Black color

Rod clevis: GKM (ISO 8140)

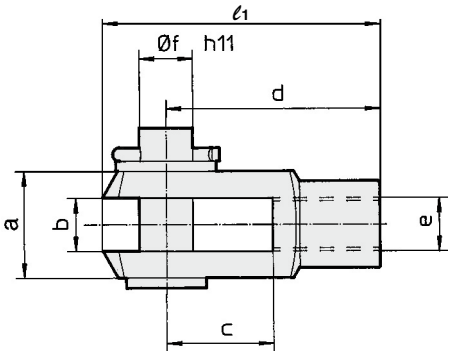

[mm]

Bore size [mm]	Part no.	e	b	d	øf h11 (Shaft)	øf H9 (Hole)	ℓ1	c (Min.)	a (Max.)
32	**GKM10-20**	M10 x 1.25	$10^{+0.5}_{+0.15}$	40	10	10	52	20	20
40	**GKM12-24**	M12 x 1.25	$12^{+0.5}_{+0.15}$	48	12	12	62	24	24
50, 63	**GKM16-32**	M16 x 1.5	$16^{+0.5}_{+0.15}$	64	16	16	83	32	32
80, 100	**GKM20-40**	M20 x 1.5	$20^{+0.5}_{+0.15}$	80	20	20	105	40	40

∗ Supplied with clevis pin and clevis pin bracket.

Rod end: KJ (ISO 8139)

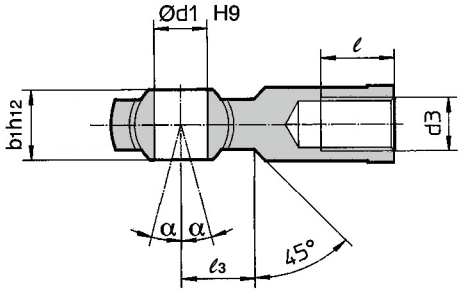

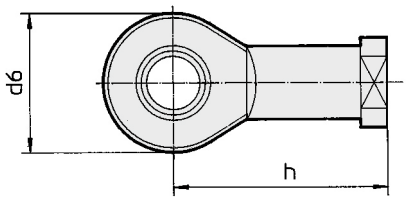

[mm]

Bore size [mm]	Part no.	d3	ød1 H9	h	d6 (Max.)	b1 h12	ℓ (Min.)	α	ℓ3
32	**KJ10D**	M10 x 1.25	10	43	28	14	20	4°	15
40	**KJ12D**	M12 x 1.25	12	50	32	16	22	4°	17
50, 63	**KJ16D**	M16 x 1.5	16	64	42	21	28	4°	23
80, 100	**KJ20D**	M20 x 1.5	20	77	50	25	33	4°	27

ISO (15552) Standard

Air Cylinder: Non-rotating Rod Type
Double Acting, Single/Double Rod

CP96K Series

ø32, ø40, ø50, ø63, ø80, ø100

RoHS

How to Order

CP96K B 32 – 100 C W

With auto switch CP96KD B 32 – 100 C W – M9BW S

With auto switch
(Built-in magnet)

Mounting

B	Basic
L	Axial foot
F	Rod flange
G	Head flange
C	Single clevis
D	Double clevis

∗ Mounting brackets are shipped together, but not assembled.

Bore size

32	32 mm
40	40 mm
50	50 mm
63	63 mm
80	80 mm
100	100 mm

Cylinder stroke [mm]
Refer to "Maximum Strokes" on page 142.

Air cushion on both ends + Bumper cushion

Rod

Nil	Single rod
W	Double rod

Auto switch

Nil	Without auto switch

∗ For applicable auto switches, refer to the table below.

Number of auto switches

Nil	2
S	1
3	3
n	n

Applicable Auto Switches/Refer to the **Web Catalog** or Best Pneumatics for further information on auto switches.

Type	Special function	Electrical entry	Indicator light	Wiring (Output)	Load voltage DC		Load voltage AC	Auto switch model	Lead wire length [m] 0.5 (Nil)	1 (M)	3 (L)	5 (Z)	Pre-wired connector	Applicable load	
Solid state auto switch	—	Grommet	Yes	3-wire (NPN)	24 V	5 V, 12 V	—	M9N	●	●	●	○	○	IC circuit	Relay, PLC
				3-wire (PNP)				M9P	●	●	●	○	○		
				2-wire		12 V		M9B	●	●	●	○	○	—	
	Diagnostic indication (2-color indicator)	Grommet		3-wire (NPN)		5 V, 12 V		M9NW	●	●	●	○	○	IC circuit	
				3-wire (PNP)				M9PW	●	●	●	○	○		
				2-wire		12 V		M9BW	●	●	●	○	○	—	
	Water-resistant (2-color indicator)			3-wire (NPN)		5 V, 12 V		M9NA∗1	○	○	●	○	○	IC circuit	
				3-wire (PNP)				M9PA∗1	○	○	●	○	○		
				2-wire		12 V		M9BA∗1	○	○	●	○	○	—	
Reed auto switch	—	Grommet	Yes	3-wire (NPN equivalent)	—	5 V	—	A96	●	—	●	—	—	IC circuit	—
				2-wire	24 V	12 V	100 V	A93	●	●	●	●	—	—	Relay, PLC
			No				100 V or less	A90	●	—	●	—	—	IC circuit	

∗1 Water-resistant type auto switches can be mounted on the above models, but SMC cannot guarantee water resistance. Please contact SMC regarding water-resistant types with the above model numbers.

∗ Lead wire length symbols: 0.5 m ····· Nil (Example) M9NW
1 m ····· M (Example) M9NWM
3 m ····· L (Example) M9NWL
5 m ····· Z (Example) M9NWZ

∗ Solid state auto switches marked with "○" are produced upon receipt of order.

∗ Since there are other applicable auto switches than listed above, refer to page 146 for details.
∗ The D-A9□/M9□/M9□W/M9□AL auto switches are shipped together, but not assembled. (Only the auto switch mounting brackets are assembled before shipment.)
∗ The D-Y59A, Y69A, Y7P, Y7□W, Z7□, Z80 cannot be mounted on the CP96 series. Moreover, the D-M9□□ and A9□ auto switches cannot be mounted on square groove of the CP96 series.

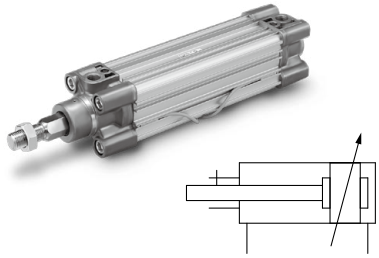

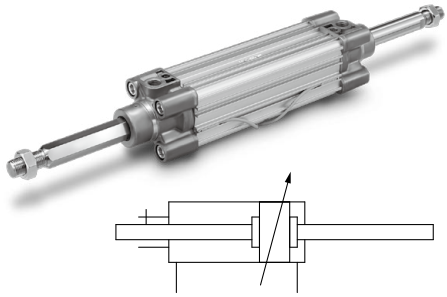

Specifications

Bore size [mm]	32	40	50	63	80	100
Action	Double acting					
Fluid	Air					
Proof pressure	1.5 MPa					
Maximum operating pressure	1.0 MPa					
Minimum operating pressure	0.05 MPa					
Ambient and fluid temperature	Without auto switch: –20 to 70°C (No freezing) With auto switch: –10 to 60°C (No freezing)					
Lubrication	Not required (Non-lube)					
Operating piston speed	50 to 1000 mm/s					
Allowable stroke tolerance	Up to 500 stroke: $^{+2}_{0}$, 501 to 1000 stroke: $^{+2.4}_{0}$					
Cushion	Air cushion on both ends + Bumper cushion					
Port size	G 1/8	G 1/4	G 1/4	G 3/8	G 3/8	G 1/2
Mounting	Basic, Axial foot, Rod flange, Head flange, Single clevis, Double clevis					
Non-rotating accuracy	±0.5°		±0.5°		±0.3°	
Allowable rotational torque [N·m]	0.25	0.45	0.64		0.79	

Maximum Strokes

Bore size [mm]	Maximum stroke*1
32	500
40	500
50	600
63	600
80	800
100	800

Intermediate strokes are available.
*1 Please consult with SMC for longer strokes.

Accessories

Mounting		Basic	Foot	Rod flange	Head flange	Single clevis	Double clevis
Standard	Rod end nut	●	●	●	●	●	●
	Clevis pin	—	—	—	—	—	●
Option	Rod end	●	●	●	●	●	●
	Rod clevis	●	●	●	●	●	●
	Rod boot	—	—	—	—	—	—

* Do not use a rod end (or floating joint) together with a single clevis with a ball joint (or clevis pivot bracket with a ball joint).
* Refer to pages 137 to 140 for dimensions and part numbers of the accessories.

⚠ Precautions

Be sure to read this before handling the products. Refer to page 219 for safety instructions. For actuator and auto switch precautions, refer to the "Handling Precautions for SMC Products" and the "Operation Manual" on the SMC website: http://www.smcworld.com

Refer to pages 145 and 146 for cylinders with auto switches.

- Auto Switch Proper Mounting Position (Detection at stroke end)
- Minimum Stroke for Auto Switch Mounting
- Operating Range
- How to Mount and Move the Auto Switch

Construction

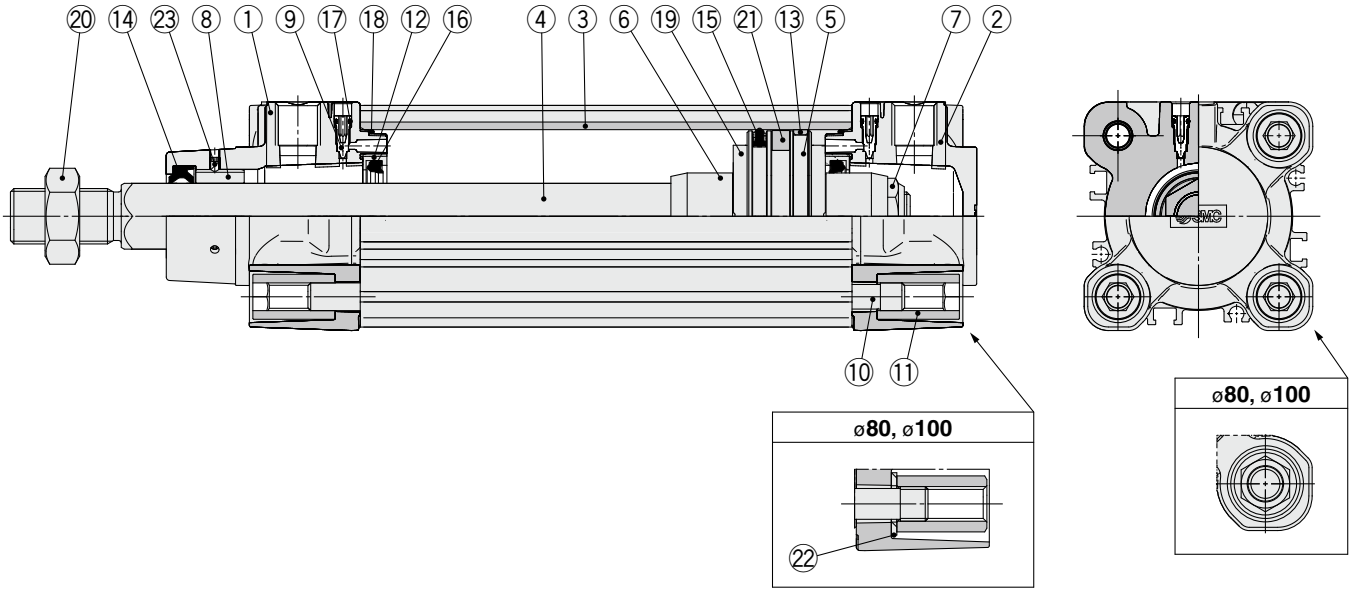

Component Parts

No.	Description	Material	Q'ty	Note
1	**Rod cover**	Aluminum die-cast	1	Trivalent chromated
2	**Head cover**	Aluminum die-cast	1	Trivalent chromated
3	**Cylinder tube**	Aluminum alloy	1	Hard anodized
4	**Piston rod**	Stainless steel	1	
5	**Piston**	Aluminum alloy	1	
6	**Cushion ring**	Rolled steel	2	Trivalent zinc chromated
7	**Piston nut**	Rolled steel	1	Trivalent zinc chromated
8	**Non-rotating guide**	Bearing alloy	1	
9	**Cushion valve**	Resin	2	
10	**Tie-rod**	Carbon steel	4	Trivalent zinc chromated
11	**Tie-rod nut**	Rolled steel	8	Trivalent zinc chromated
12	**Cushion seal holder**	Aluminum alloy	2	Anodized
13	**Wear ring**	Resin	1	
14	**Rod seal**	NBR	1	
15	**Piston seal**	NBR	1	
16	**Cushion seal**	Urethane	2	
17	**Cushion valve seal**	NBR	2	
18	**Cylinder tube gasket**	NBR	2	
19	**Bumper**	Urethane	2	
20	**Rod end nut**	Rolled steel	1	Trivalent zinc chromated
21	**Magnet**	—	(1)	
22	**Flat washer**	Steel	8	For ø80, ø100
23	**Hexagon socket head set screw**	Steel wire	2	Trivalent black zinc chromated

Replacement Parts/Seal Kit (Single rod)

Bore size [mm]	Kit no.	Contents
32	CK95-32	Kits include items ⑬ to ⑯, ⑱.
40	CK95-40	
50	CK95-50	
63	CK95-63	
80	CK95-80	
100	CK96-100	

∗ Seal kits consist of items ⑬ to ⑯, ⑱ and can be ordered by using the seal kit number corresponding to each bore size.
∗ The seal kit includes a grease pack (10 g for ø32 to ø50, 20 g for ø63 and ø80, 30 g for ø100).
Order with the following part number when only the grease pack is needed.
Grease pack part number: GR-S-010 (10 g), **GR-S-020** (20 g)

Seal Kit (Double rod)

Bore size [mm]	Kit no.	Contents
32	CK95W-32	Kits include items ⑭ to ⑯, ⑱.
40	CK95W-40	
50	CK95W-50	
63	CK95W-63	
80	CK95W-80	
100	CK96W-100	

∗ Seal kits consist of items ⑭ to ⑯, ⑱ and can be ordered by using the seal kit number corresponding to each bore size.
∗ The seal kit includes a grease pack (10 g for ø32 to ø50, 20 g for ø63 and ø80, 30 g for ø100).
Order with the following part number when only the grease pack is needed.
Grease pack part number: GR-S-010 (10 g), **GR-S-020** (20 g)

Dimensions (Without mounting bracket)

CP96K (D) B Bore size – Stroke C

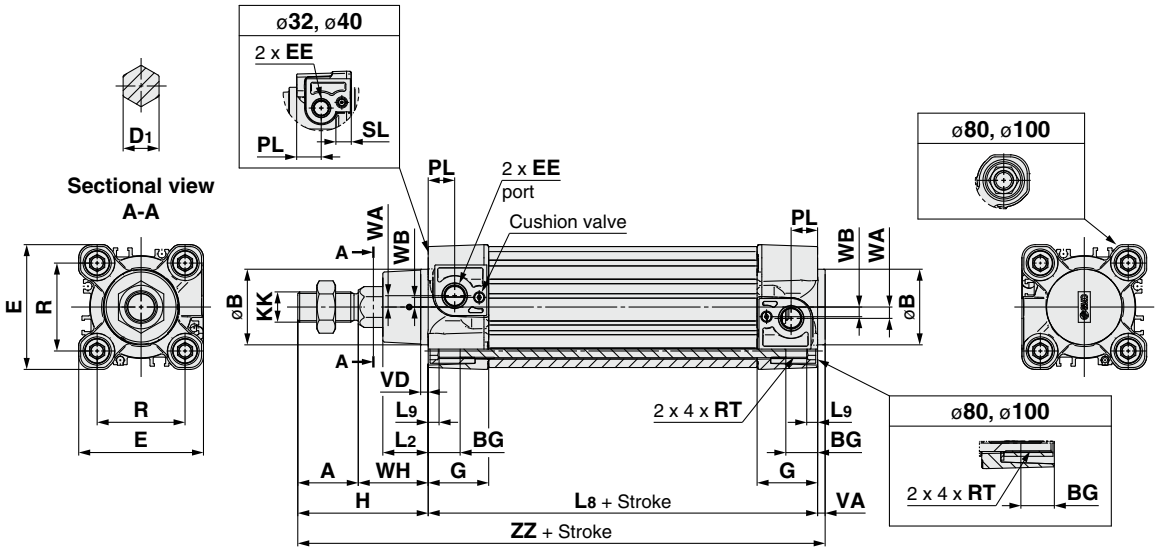

CP96K (D) B Bore size – Stroke CW

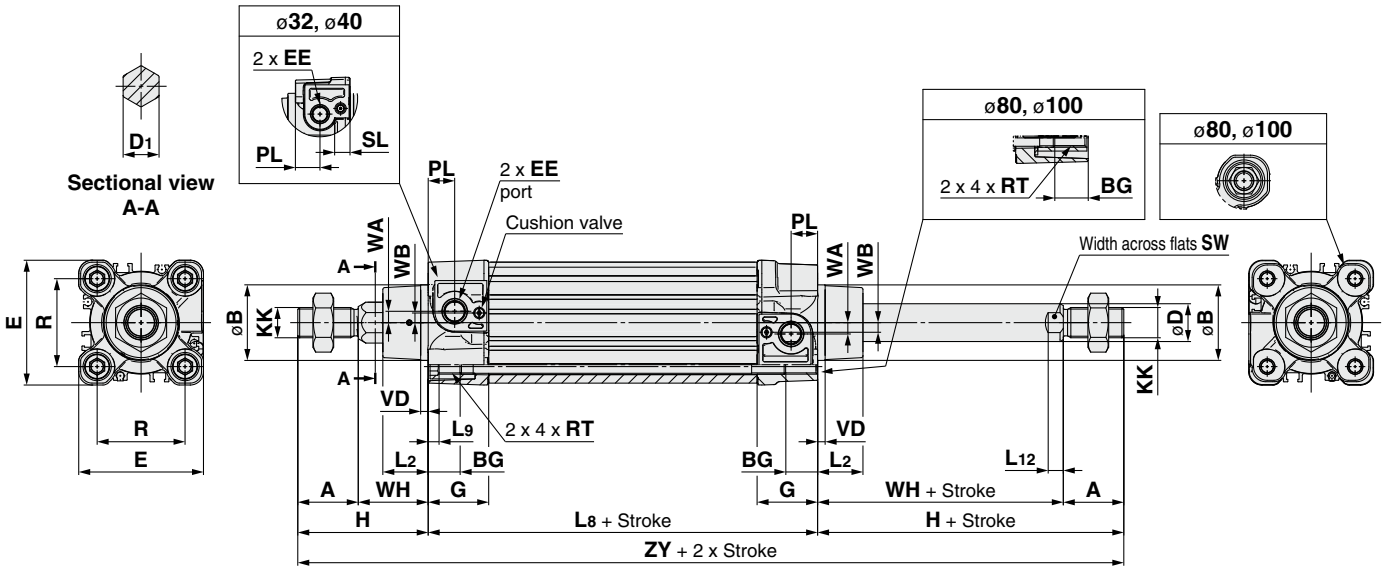

∗ Mounting brackets are the same as standard type. Refer to page 136 for details.

Bore size [mm]	Stroke range [mm]	A	øB d11	D1	øD	EE	PL	RT	L12	KK	SW	G	BG	L8	VD	VA	WA	WB	WH	ZZ	ZY	E	R	L2	L9	H	SL
32	Up to 500	22	30	12.2	12	G 1/8	13	M6 x 1	6	M10 x 1.25	10	28.9	16	94	4	4	4	7	26	146	190	47	32.5	15	4	48	8
40	Up to 500	24	35	14.2	16	G 1/4	14	M6 x 1	6.5	M12 x 1.25	13	32.6	16	105	4	4	5	8.9	30	163	213	54	38	17	4	54	8
50	Up to 600	32	40	19	20	G 1/4	14	M8 x 1.25	8	M16 x 1.5	17	32	16	106	4	4	6	5.1	37	179	244	66	46.5	24	5	69	—
63	Up to 600	32	45	19	20	G 3/8	16	M8 x 1.25	8	M16 x 1.5	17	38.6	16	121	4	4	9	6.3	37	194	259	77	56.5	24	5	69	—
80	Up to 800	40	45	23	25	G 3/8	16	M10 x 1.5	10	M20 x 1.5	22	38.4	17	128	4	4	11.5	6	46	218	300	99	72	30	—	86	—
100	Up to 800	40	55	23	25	G 1/2	18	M10 x 1.5	10	M20 x 1.5	22	42.9	17	138	4	4	17	10	51	233	320	118	89	32	—	91	—

CP96 Series
Auto Switch Mounting

Auto Switch Proper Mounting Position (Detection at stroke end)

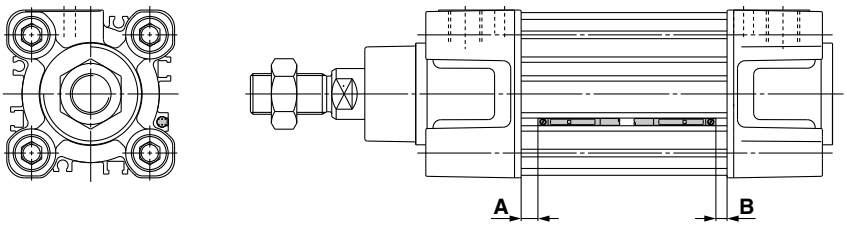

Auto Switch Proper Mounting Position [mm]

Auto switch model / Bore size	D-M9□(V) D-M9□W(V) D-M9□A(V)		D-A9□(V)	
	A	B	A	B
32	14	10.5	10	6.5
40	14	14	10	10
50	15.5	14.5	11.5	10.5
63	16.5	15.5	12.5	11.5
80	21.5	18	17.5	14
100	21.5	19	17.5	15

∗ Adjust the auto switch after confirming the operating conditions in the actual setting.
∗ The D-M9□V/M9□WV/M9□AV/A9□V are mountable on ø32 to ø63.

Minimum Stroke for Auto Switch Mounting

[mm]

Auto switch model	Number of auto switches	32	40	50	63	80	100
D-M9□ D-M9□W	2 (Same surface)	50					
	1, 2 (Different surfaces)	10					
	n	10 + 40 (n – 2)					
D-M9□V D-M9□WV	2 (Same surface)	40					
	1, 2 (Different surfaces)	10					
	n	10 + 30 (n – 2)					
D-M9□A	2 (Same surface)	55	50				
	1, 2 (Different surfaces)	15	10				
	n	15 + 40 (n – 2)	10 + 40 (n – 2)				
D-M9□AV	2 (Same surface)	40					
	1, 2 (Different surfaces)	10					
	n	10 + 30 (n – 2)					
D-A9□	2 (Same surface)	50					
	1, 2 (Different surfaces)	10					
	n	10 + 40 (n – 2)					
D-A9□V	2 (Same surface)	40					
	1, 2 (Different surfaces)	10					
	n	10 + 30 (n – 2)					

∗ n = 3, 4, 5···
∗ The D-M9□V/M9□WV/M9□AV/A9□V are mountable on ø32 to ø63.

Operating Range

[mm]

Auto switch model	Bore size					
	32	40	50	63	80	100
D-M9□(V) D-M9□W(V) D-M9□A(V)	4	4	5	6	5.5	6
D-A9□(V)	7	8	8.5	9.5	9.5	10.5

∗ Values which include hysteresis are for guideline purposes only, they are not a guarantee (assuming approximately ±30% dispersion) and may change substantially depending on the ambient environment.
∗ The D-M9□V/M9□WV/M9□AV/A9□V are mountable on ø32 to ø63.

How to Mount and Move the Auto Switch

<Applicable Auto Switch>

Solid state switch ····· D-M9N(V)/M9P(V)/M9B(V)
D-M9NW(V)/M9PW(V)/M9BW(V)
D-M9NA(V)/M9PA(V)/M9BA(V)
Reed switch····· D-A90(V)/A93(V)/A96(V)

How to Mount and Move the Auto Switch

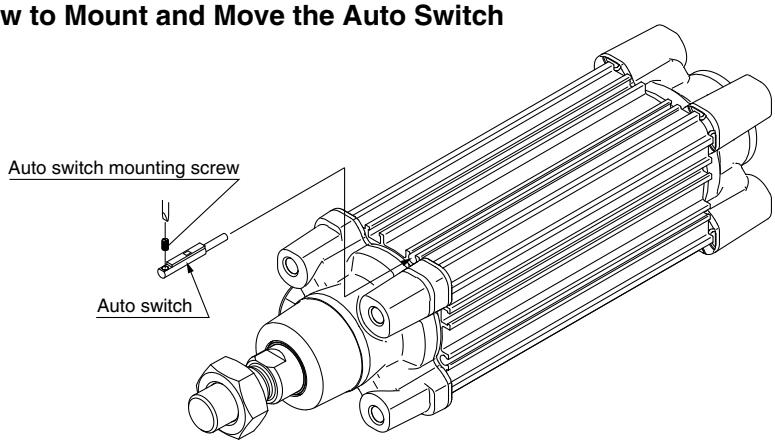

•Use a watchmaker's screwdriver with a handle diameter of 5 to 6 mm when tightening the auto switch mounting screw.

Auto switch mounting screw tightening torque [N·m]

Auto switch model	Tightening torque
D-M9□(V) **D-M9□W(V)** **D-M9□A(V)**	0.05 to 0.15
D-A9□(V)	0.10 to 0.20

∗ As a guide, turn 90° from the position where it comes to feel tight.
∗ The D-M9□ and A9□ cannot be mounted on square groove of the CP96 series.
∗ The D-M9□V/M9□WV/M9□AV/A9□V are mountable on ø32 to ø63.

Other than the applicable auto switches listed in "How to Order", the following auto switches are mountable.
Refer to the **Web Catalog** or Best Pneumatics for the detailed specifications.

Type	Model	Electrical entry	Features	Applicable bore size
Solid state	**D-M9NV, M9PV, M9BV**	Grommet (Perpendicular)	—	ø32 to ø63
	D-M9NWV, M9PWV, M9BWV		Diagnostic indication (2-color indicator)	
	D-M9NAV, M9PAV, M9BAV		Water-resistant (2-color indicator)	
Reed	**D-A93V, A96V**		—	
	D-A90V		Without indicator light	

∗ Normally closed (NC = b contact) solid state auto switches (D-F9G/F9H) are also available.
For details, refer to the **Web Catalog** or Best Pneumatics.
∗ With pre-wired connector is also available for solid state auto switches. For details, refer to the **Web Catalog** or Best Pneumatics.

Prior to Use
Auto Switch Connections and Examples

Sink Input Specifications

3-wire, NPN

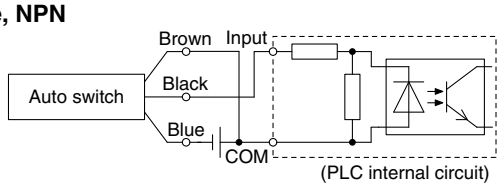

2-wire

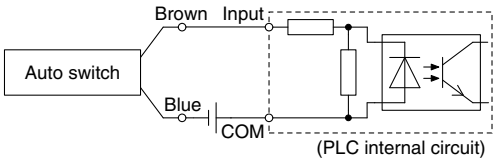

Source Input Specifications

3-wire, PNP

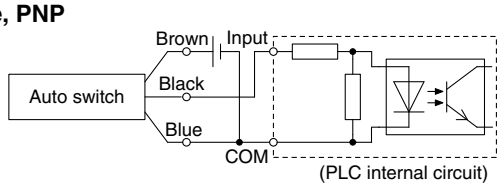

2-wire

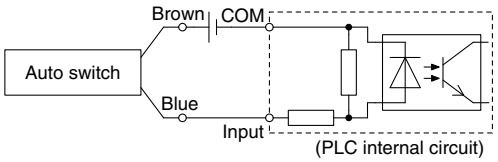

Connect according to the applicable PLC input specifications, as the connection method will vary depending on the PLC input specifications.

Examples of AND (Series) and OR (Parallel) Connections

∗ When using solid state auto switches, ensure the application is set up so the signals for the first 50 ms are invalid.

3-wire AND connection for NPN output

(Using relays)

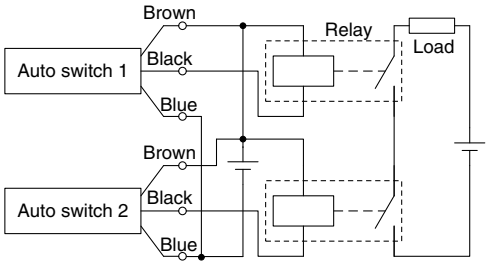

(Performed with auto switches only)

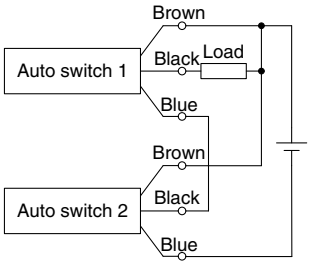

3-wire OR connection for NPN output

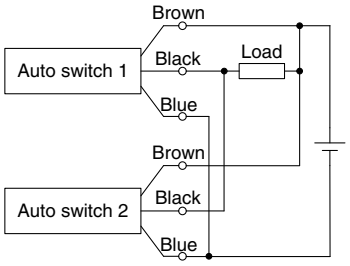

3-wire AND connection for PNP output

(Using relays)

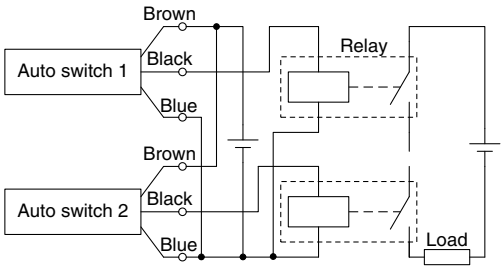

(Performed with auto switches only)

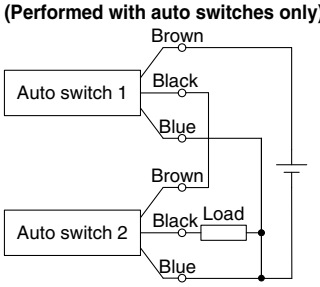

3-wire OR connection for PNP output

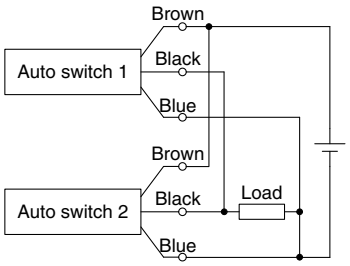

2-wire AND connection

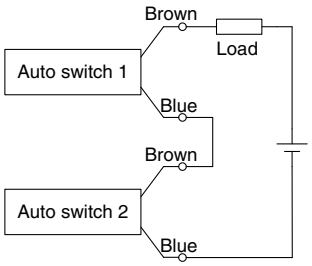

When two auto switches are connected in series, a load may malfunction because the load voltage will decline when in the ON state.
The indicator lights will light up when both of the auto switches are in the ON state.
Auto switches with a load voltage less than 20 V cannot be used.

Load voltage at ON = Power supply voltage – Residual voltage x 2 pcs.
= 24 V – 4 V x 2 pcs.
= 16 V

Example: Power supply is 24 VDC
Internal voltage drop in auto switch is 4 V.

2-wire OR connection

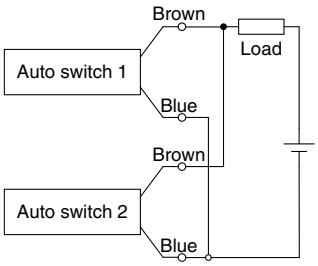

(Solid state)
When two auto switches are connected in parallel, malfunction may occur because the load voltage will increase when in the OFF state.

(Reed)
Because there is no current leakage, the load voltage will not increase when turned OFF.
However, depending on the number of auto switches in the ON state, the indicator lights may sometimes grow dim or not light up, due to the dispersion and reduction of the current flowing to the auto switches.

Load voltage at OFF = Leakage current x 2 pcs. x Load impedance
= 1 mA x 2 pcs. x 3 kΩ
= 6 V

Example: Load impedance is 3 kΩ.
Leakage current from auto switch is 1 mA.

Simple Specials/Made to Order

Made to Order

Please contact SMC for detailed specifications, delivery, and prices.

■Simple Specials

The following special specifications can be ordered as a simplified Made-to-Order.
Please contact your local sales representative for more details.

Symbol	Specifications	CP96 (Standard type) Double acting Single rod	CP96 (Standard type) Double acting Double rod
-XA0 to 30	Change of rod end shape	●	●

■Made to Order

Symbol	Specifications	CP96 (Standard type) Double acting Single rod	CP96 (Standard type) Double acting Double rod
-XB6	Heat-resistant cylinder (–10 to 150°C)*1	●	●
-XC4	With heavy duty scraper	●	●
-XC7	Tie-rod, tie-rod nut, etc. made of stainless steel	●	●
-XC10	Dual stroke cylinder/Double rod type	●	
-XC11	Dual stroke cylinder/Single rod type	●	
-XC22	Fluororubber seal	●	●
-XC35	With coil scraper	●	●
-XC65	Made of stainless steel (Combination of -XC7 and -XC68)	●	●
-XC68	Made of stainless steel (with hard chrome plated piston rod)	●	●
-XC88	Spatter-resistant coil scraper, Lube-retainer, grease for welding (Piston rod: Stainless steel 304)	●	●
-XC89	Spatter-resistant coil scraper, Lube-retainer, grease for welding (Piston rod: S45C)	●	●

*1 The products with an auto switch are not compatible.

CP96 Series
Simple Specials

The following changes are dealt with through the Simple Specials System.

For details, refer to the Simple Specials in the Web Catalog.
http://www.smcworld.com

1 Change of Rod End Shape

Symbol
-XA0 to -XA30

Applicable Series

Description	Model	Action	Symbol for change of rod end shape
Standard type	**CP96S**	Double acting, Single rod	XA0 to 30
	CP96S-W	Double acting, Double rod	XA0 to 30

⚠ Precautions

1. SMC will make appropriate arrangements if no dimension, tolerance, or finish instructions are given in the diagram.
2. Standard dimensions marked with "*" will be as follows to the rod diameter (D). Enter any special dimension you require.
   $D \leq 6 \rightarrow D - 1$ mm, $6 < D \leq 25 \rightarrow D - 2$ mm, $D > 25 \rightarrow D - 4$ mm
3. In the case of the double rod type and single acting retraction type, enter the dimensions when the rod is retracted.
4. Only one side of a double rod can be manufactured.
5. "A0" is the same shape as the standard type. (The specifications of A0 are that only dimensions A and H are changed from the standard type.)

Symbol: A0

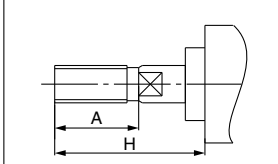

Symbol: A1

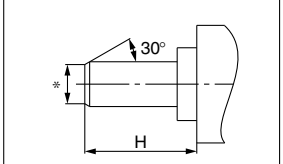

Symbol: A2

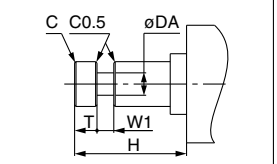

Symbol: A3

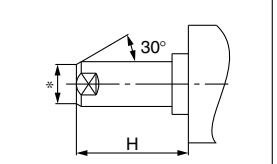

Symbol: A4

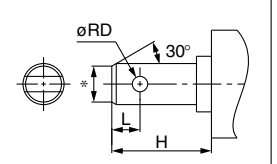

Symbol: A5

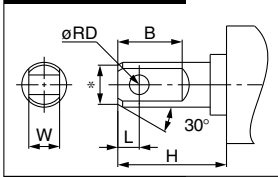

Symbol: A6

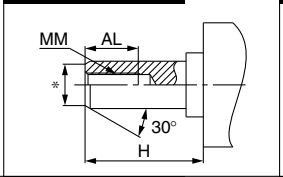

Symbol: A7

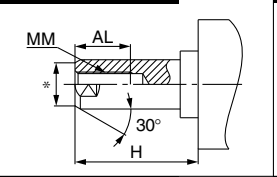

Symbol: A8

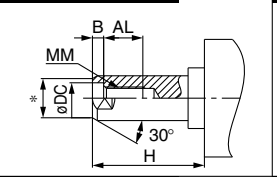

Symbol: A9

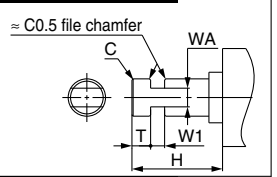

Symbol: A10

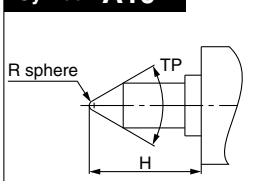

Symbol: A11

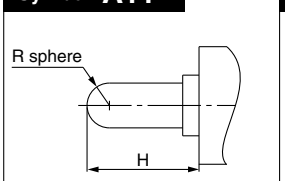

Symbol: A12

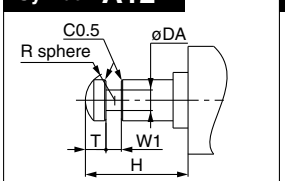

Symbol: A13

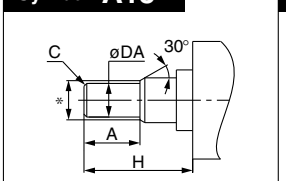

Symbol: A14

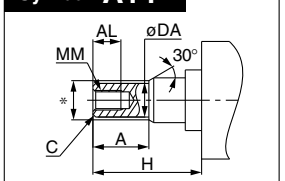

Symbol: A15

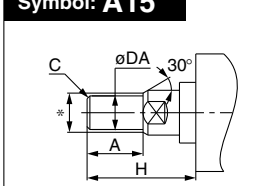

Symbol: A16

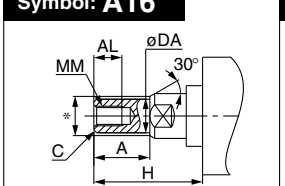

Symbol: A17

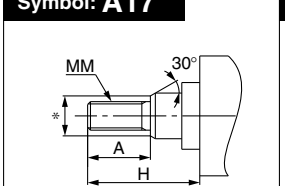

Symbol: A18

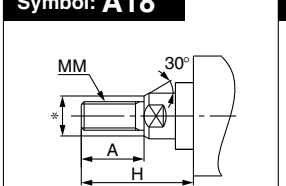

Symbol: A19

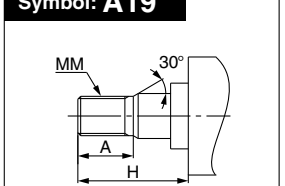

Symbol: A20

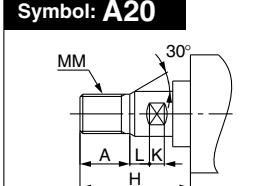

Symbol: A21

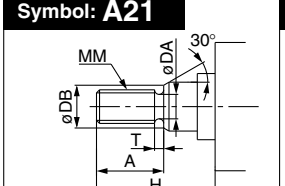

Symbol: A22

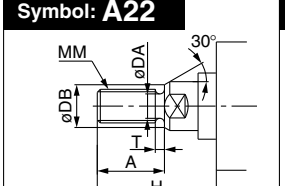

Symbol: A23

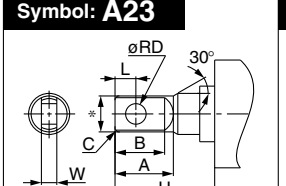

Symbol: A24

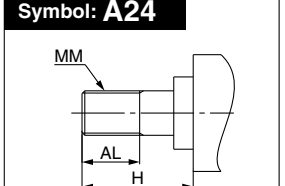

Symbol: A25

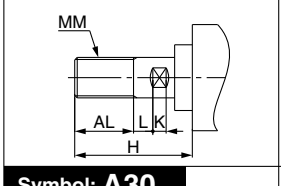

Symbol: A26

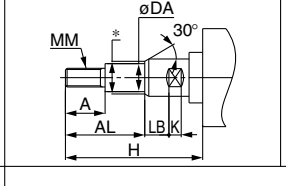

Symbol: A27

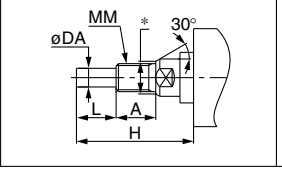

Symbol: A28

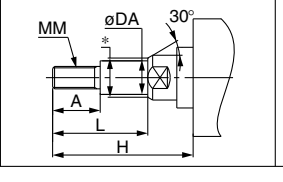

Symbol: A29

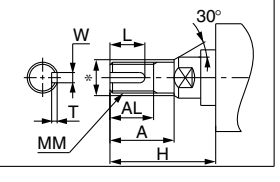

Symbol: A30

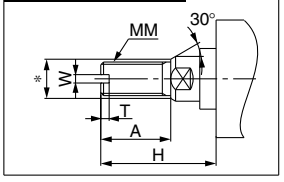

Made to Order

Please contact SMC for detailed dimensions, specifications, and lead times.

Made to Order

1 Heat-resistant Cylinder (–10 to 150°C)

Symbol **-XB6**

Air cylinder which changed the seal material and grease, so that it could be used even at higher temperature up to 150°C.

Applicable Series

Description	Model	Action
Standard type	**CP96S**	Double acting, Single rod
	CP96S-W	Double acting, Double rod

How to Order

Standard model no. **–XB6**

Heat-resistant cylinder

Specifications

Ambient temperature range	–10 to 150°C
Seal material	Fluororubber
Grease	Heat-resistant grease
Specifications other than above and external dimensions	Same as standard type

* Operate without lubrication from a pneumatic system lubricator.
* Please contact SMC for details on the maintenance intervals for this cylinder, which differ from those of the standard cylinder.
* In principle, it is impossible to make built-in magnet type and the one with auto switch.
  But, as for the one with auto switch, and the heat-resistant cylinder with heat-resistant auto switch, since it will be differed depending on the series, please contact SMC.
* Piston speed is ranged from 50 to 500 mm/s.

⚠ Warning

Precautions

Be aware that smoking cigarettes etc. after your hands have come into contact with the grease used in this cylinder can create a gas that is hazardous to humans.

2 With Heavy Duty Scraper

Symbol **-XC4**

It is suitable for using cylinders under the environment, where there are much dusts in a surrounding area by using a heavy duty scraper on the wiper ring, or using cylinders under earth and sand exposed to the die-casted equipment, construction machinery, or industrial vehicles.

Applicable Series

Description	Model	Action
Standard type	**CP96S**	Double acting, Single rod
	CP96S-W	Double acting, Double rod

How to Order

Standard model no. **–XC4**

With heavy duty scraper

Specifications: Same as standard type

Dimensions: Same as standard type

⚠ Caution

Do not replace heavy duty scrapers.

Since heavy duty scrapers are press-fit, do not replace the cover only, but rather the entire rod cover assembly.

3 Tie-rod, Tie-rod Nut, etc. Made of Stainless Steel

Symbol **-XC7**

When using in locations where the rust generation or corrosion likelihood exists, the standard parts material have been partly changed to the stainless steel.

Applicable Series

Description	Model	Action
Standard type	**CP96S**	Double acting, Single rod
	CP96S-W	Double acting, Double rod

How to Order

Standard model no. **−XC7**

Tie-rod, tie-rod nut, etc. made of stainless steel

Specifications

Parts changed to stainless steel	Tie-rod, Tie-rod nut, Mounting bracket nut, Spring washer, Lock nut
Specifications other than above	Same as standard type
Dimensions	Same as standard type

4 Dual Stroke Cylinder/Double Rod Type

Symbol **-XC10**

Two cylinders are constructed as one cylinder in a back-to-back configuration allowing the cylinder stroke to be controlled in three steps.

Applicable Series

Description	Model	Action	Note
Standard type	**CP96S**	Double acting, Single rod	Excluding clevis type

How to Order

CP96S [Mounting type] [Bore size] − [Stroke A] + [Stroke B] C − **XC10**

Dual stroke cylinder

Specifications

Maximum manufacturable stroke [mm]
1000

Function

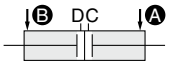

When air pressure is supplied to ports Ⓐ and Ⓑ, both strokes A and B retract.

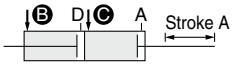

When air pressure is supplied to ports Ⓑ and Ⓒ, A out strokes.

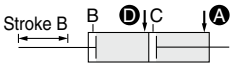

When air pressure is supplied to ports Ⓐ and Ⓓ, B out strokes.

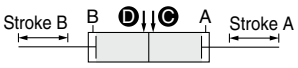

When air pressure is supplied to ports Ⓒ and Ⓓ, both strokes A and B out strokes.

Dimensions (Dimensions other than below are the same as standard type.)

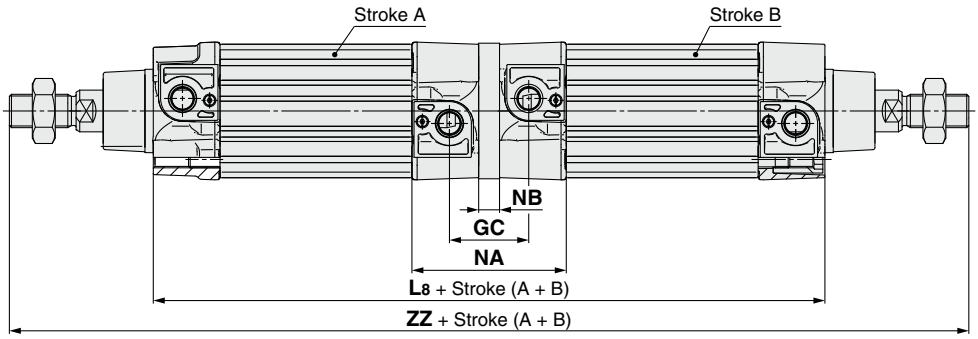

Bore size [mm]	L8	ZZ	NA	NB	GC
ø32	198	294	67.8	10	36
ø40	220	328	75.2	10	38
ø50	222	360	74	10	38
ø63	252	390	87.2	10	42
ø80	270	442	90.8	14	46
ø100	290	472	99.8	14	50

5 Dual Stroke Cylinder/Single Rod Type

Symbol
-XC11

Two cylinders can be integrated by connecting them in line, and the cylinder stroke can be controlled in two stages in both directions.

Applicable Series

Description	Model	Action
Standard type	**CP96S**	Double acting, Single rod

How to Order

Specifications: Same as standard type

CP96S [Mounting type] [Bore size] – [Stroke A] + [Stroke B-A] **C – XC11**

Dual stroke cylinder/Single rod type

Function

Functional description of dual stroke cylinder

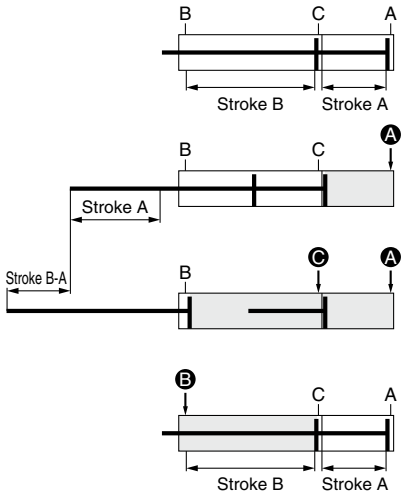

1) Initial state
(0 stroke position)

2) 1st stage: Stroke A operation
When the air pressure is supplied from the A port, the rod operates the stroke A.

3) 2nd stage: Stroke B-A operation
Following the 1st stage, when the air pressure is supplied from the C port, the rod operates the stroke B-A.

4) Cylinder retraction
When the air pressure is supplied from the B port, the rod retracts completely.

Stroke A or Stroke B operation can be made individually.

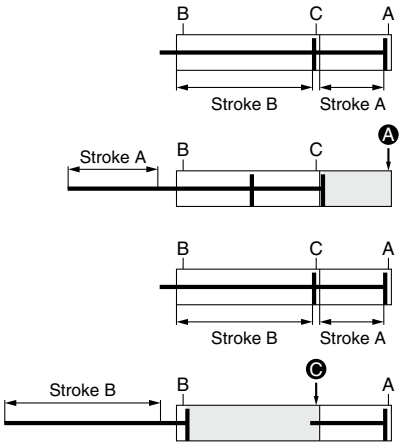

Stroke A operation

1) Initial state
(0 stroke position)

2) Operation
When the air pressure is supplied from the A port, the rod operates the stroke A.

Stroke B operation

1) Initial state
(0 stroke position)

2) Operation
When the air pressure is supplied from the C port, the rod operates the stroke B.

Double output is possible.

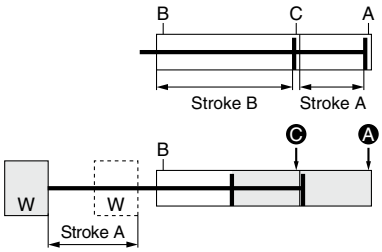

1) Initial state
(0 stroke position)

2) Double output
When the air pressure is supplied to the A and C ports at the same time, the double output can be obtained in the stroke A range.

Precautions

⚠ Caution

1. **Do not supply air until the cylinder is fixed with the attached bolt.**
2. **If air is supplied without securing the cylinder, the cylinder could lurch, posing the risk of bodily injury or damage to the peripheral equipment.**

Dimensions (Dimensions other than below are the same as standard type.)

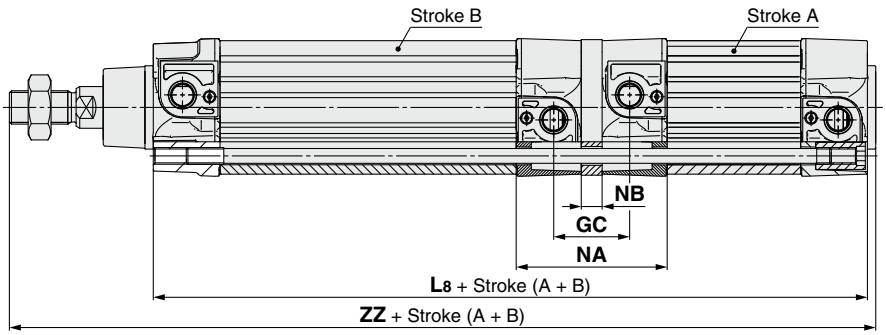

Bore size [mm]	L8	ZZ	NA	NB	GC
ø32	199	251	67.2	10	35.4
ø40	221	279	74.6	10	37.4
ø50	223	296	73.4	10	37.4
ø63	253	326	86.6	10	41.4
ø80	271	361	90.2	14	45.4
ø100	291	386	99.2	14	49.4

6 Fluororubber Seal

Symbol
-XC22

Applicable Series

Description	Model	Action
Standard type	**CP96S**	Double acting, Single rod
	CP96S-W	Double acting, Double rod

How to Order

Standard model no. – **XC22**

Fluororubber seal (including bumper)

Specifications

Seal material	Fluororubber
Ambient temperature range	With auto switch: –10°C to 60°C (No freezing)*1 Without auto switch: –10°C to 70°C (No freezing)
Specifications other than above and external dimensions	Same as standard type

*1 Please contact SMC, as the type of chemical and the operating temperature may not allow the use of this product.
* Cylinders with auto switches can also be produced; however, auto switch related parts (auto switch units, mounting brackets, built-in magnets) are the same as standard products. Before using these, please contact SMC regarding their suitability for the operating environment.

7 With Coil Scraper

Symbol
-XC35

It gets rid of frost, ice, weld spatter, cutting chips adhered to the piston rod, and protects the seals etc.

Applicable Series

Description	Model	Action
Standard type	**CP96S**	Double acting, Single rod
	CP96S-W	Double acting, Double rod

How to Order

Standard model no. – **XC35**

With coil scraper

Specifications: Same as standard type
Dimensions: Same as standard type

8 Made of Stainless Steel (Combination of -XC7 and -XC68)

Symbol **-XC65**

Suitable for the cases it is likely to generate rust by being immersed in the water and corrosion.

Applicable Series

Description	Model	Action
Standard type	**CP96S**	Double acting, Single rod
	CP96S-W	Double acting, Double rod

∗ There is a maximum stroke limit for CP96 cylinder.

Maximum Stroke

[mm]

Double acting, Single rod	Double acting, Double rod
ø32: 1800 ø40 to ø100: 1700	1000 (Same as standard type)

Specifications

Parts changed to stainless steel	Piston rod, Rod end nut, Tie-rod, Tie-rod nut, Mounting bracket nut, Spring washer, Lock nut
Other specifications and external dimensions	Same as standard type

How to Order

Standard model no. **– XC65**

Made of stainless steel (Combination of -XC7 and -XC68)

9 Made of Stainless Steel (With Hard Chrome Plated Piston Rod)

Symbol **-XC68**

Suitable for the cases it is likely to generate rust by being immersed in the water and corrosion.

Applicable Series

Description	Model	Action
Standard type	**CP96S**	Double acting, Single rod
	CP96S-W	Double acting, Double rod

Maximum Stroke

[mm]

Double acting, Single rod	Double acting, Double rod
ø32: 1800 ø40 to ø100: 1700	1000 (Same as standard type)

Specifications

Parts changed to stainless steel	Piston rod, Rod end nut
Other specifications and external dimensions	Same as standard type

How to Order

Standard model no. **– XC68**

Made of stainless steel (With hard chrome plated piston rod)

10 Spatter-resistant Coil Scraper, Lube-retainer, Grease for Welding (Piston rod: Stainless steel 304)

Symbol **-XC88**

Reduces spatter adhesion and improves durability by the use of the coil scraper, Lube-retainer and grease for welding.

Applicable Series

Description	Model	Action
Standard type	**CP96S**	Double acting, Single rod
	CP96S-W	Double acting, Double rod

How to Order

Standard model no. – XC88

- **Spatter-resistant coil scraper, Lube-retainer, grease for welding (Piston rod: Stainless steel 304)**

Specifications

Piston rod	Stainless steel 304 (With hard chrome plated)
Scraper	With coil scraper, With Lube-retainer
Grease	Grease for welding
Other specifications and external dimensions	Same as standard type

11 Spatter-resistant Coil Scraper, Lube-retainer, Grease for Welding (Piston rod: S45C)

Symbol **-XC89**

Reduces spatter adhesion and improves durability by the use of the coil scraper, Lube-retainer and grease for welding.

Applicable Series

Description	Model	Action
Standard type	**CP96S**	Double acting, Single rod
	CP96S-W	Double acting, Double rod

How to Order

Standard model no. – XC89

- **Spatter-resistant coil scraper, Lube-retainer, grease for welding (Piston rod: S45C)**

Specifications

Piston rod	S45C (With hard chrome plated)
Scraper	With coil scraper, With Lube-retainer
Grease	Grease for welding
Other specifications and external dimensions	Same as standard type

Specific Product Precautions

Be sure to read this before handling the products. Refer to page 219 for safety instructions. For actuator and auto switch precautions, refer to the "Handling Precautions for SMC Products" and the "Operation Manual" on the SMC website: http://www.smcworld.com

Adjustment

⚠ Warning

1. Do not open the cushion valve more than the allowable number of rotations (following table).

Although the cushion valve is caulked as a retaining mechanism, do not open the cushion valve more than the allowable number of rotations. If air is supplied and operation started without confirming the above condition, the cushion valve may be ejected from the cover.

The allowable number of rotations refers to the number of rotations until the restrictor of the cushion valve is completely opened from the completely closed state.

2. Keep the screwing torque and the unscrewing torque of the cushion valve to the allowable torque or below (following table).

If a screwing torque or unscrewing torque beyond the allowable torque is applied, the valve will be damaged when the valve is closed completely or exceeds the retaining mechanism when the valve is opened completely, which will dislocate the engagement of the screw and eject the valve.

Bore size [mm]	Cushion valve width across flats	Hexagon wrench	Allowable number of rotations	Allowable torque [N·m]
32, 40	2	JIS 4648 Hexagon wrench key 2	4	0.02
50, 63	2	JIS 4648 Hexagon wrench key 2	4.5	0.02
80, 100	3	JIS 4648 Hexagon wrench key 3	5.5	0.06

3. Be certain to activate the air cushion at the stroke end.

When the air cushion is inactivated, if the allowable kinetic energy exceeds the value on page 131, the piston rod assembly or the tie-rod may be damaged. Set the air cushion to valid when operating the cylinder.

⚠ Caution

1. When replacing brackets, use the hexagon wrenches shown below.

Bore size [mm]	Width across flats	Tightening torque [N·m]
32, 40	4	4.8
50, 63	5	10.4
80, 100	6	18.2